Features

- Hard anodized aluminum barrel provides corrosion and wear resistance as well as long life.
- Compact size and space saving.
- Strict quality control ensures the product in stability and excellent performance.
- Simple maintenance and installation.
- Different bore sizes and strokes for selection.
- Various sensor switches are available.

How to order

JC | 32 | B | 50 | H | M | SR | 1

Type	
JC	Standard double acting
JCO	Single acting/Spring extended (ϕ 12~ ϕ 50)
JCI	Single acting/Spring return (ϕ 12~ ϕ 50)
JCA	Stroke adjustable 25mm (ϕ 20~ ϕ 100)
JCB	Stroke adjustable 50mm (ϕ 20~ ϕ 100)
JCD	Double rod/Double acting (ϕ 20~ ϕ 100)

Bore size	
12	ϕ 12
16	ϕ 16
20	ϕ 20
25	ϕ 25
32	ϕ 32
40	ϕ 40
50	ϕ 50
63	ϕ 63
80	ϕ 80
100	ϕ 100

Stroke

Rod thread	
Blank	Female thread
H	Male thread

Magnet	
Blank	W/O magnet
M	W/I magnet

Sensor type	
Blank	W/O sensor
SS	Square type
SR	Round type
SU	Square type

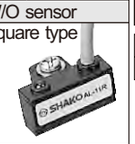
AL-11R


AL-07R


AL-16R

Number of sensor
1 pc
2 pcs

*Please use stainless setting bolts for magnet type cylinder to mount.

Specifications

Bore size	ϕ 12	ϕ 16	ϕ 20	ϕ 25	ϕ 32	ϕ 40	ϕ 50	ϕ 63	ϕ 80	ϕ 100
Port size	M5xP0.8				1/8"		1/4"		3/8"	
Fluid	Compressed air									
Acting	Double acting or single acting									
Operating pressure range	1.0 ～ 9 kgf/cm²									
Max operating pressure	9.5 kgf/cm²									
Barrel material	Aluminum alloy									
Magnet	Option									
Ambient temperature	-5℃ ～ 60℃									
Piston speed	50~700mm/Sec									
Double acting mm/Sec.	50～500							50~300	50～250	
Single acting mm/Sec.	100～500							—		

Material of parts

Without magnet

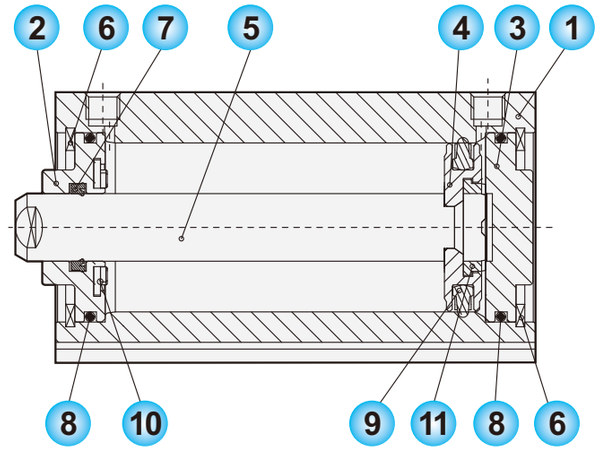

With magnet

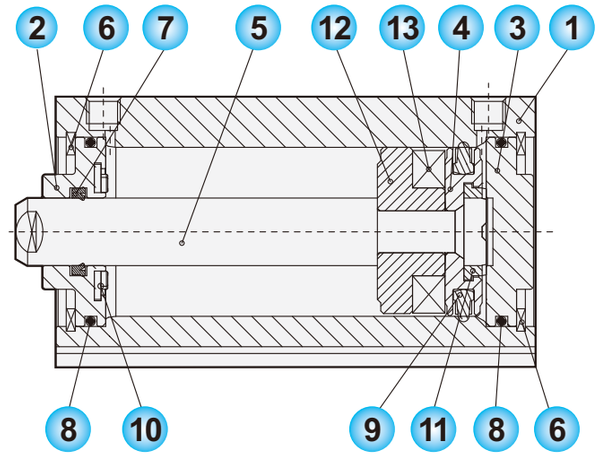

No.	Description	Material	Qty.	No.	Description	Material	Qty.
1	Barrel	Aluminum alloy	1	8	O-ring	NBR	2
2	Front cover	Cu	1	9	U-Piston seal	NBR	1
3	Rear cover	Cu	1	10	Cushion Plate	NBR	1
4	Piston	Aluminum alloy	1	11	Cushion Plate	NBR	1
5	Piston rod	S45C+Cr	1	12	Magnet	Aluminum alloy	1
6	Snap ring	Spring steel	2	13	Magnet	Ferrite magnet	1
7	Rod seal	HNBR	1				

PNEUMATIC CYLINDER

Stroke table

Model	Bore size	Standard stroke (mm)											Standard stroke (with magnet)							
		5	10	15	20	25	30	35	40	45	50	75	5	10	15	20	25	30	35	40
Double acting	ϕ 12	●	●	●	●	●	●						●	●	●	●				
	ϕ 16	●	●	●	●	●	●						●	●	●	●				
	ϕ 20	●	●	●	●	●	●	◎	●	◎	●		●	●	●	●	◎	●	◎	●
	ϕ 25	●	●	●	●	●	●	◎	●	◎	●		●	●	●	●	◎	●	◎	●
	ϕ 32	●	●	●	●	●	●	◎	●	◎	●		●	●	●	●	◎	●	◎	●
	ϕ 40	◎	●	◎	●	◎	●	◎	●	◎	●		◎	●	◎	●	◎	●	◎	●
	ϕ 50	◎	●	◎	●	◎	●	◎	●	◎	●		◎	●	◎	●	◎	●	◎	●
	ϕ 63	◎	●	◎	●	◎	●	◎	●	◎	●		◎	●	◎	●	◎	●	◎	●
	ϕ 80	◎	●	◎	●	◎	●	◎	●	◎	●	●	◎	●	◎	●	◎	●	◎	●
	ϕ 100	◎	●	◎	●	◎	●	◎	●	◎	●	●	◎	●	◎	●	◎	●	◎	●
Single acting	ϕ 12	●	●										◎	●						
	ϕ 16	●	●										◎	●						
	ϕ 20	●	●										◎	●						
	ϕ 25	●	●										◎	●						
	ϕ 32	●	●										◎	●						
	ϕ 40	●	●										◎	●						
	ϕ 50		●		●									●		●				

Note: 1. The body length for the strokes marked ◎ is increased of 5mm as standard.
2. For Non-standard stroke, please contact our sales.

Sensor mounting example

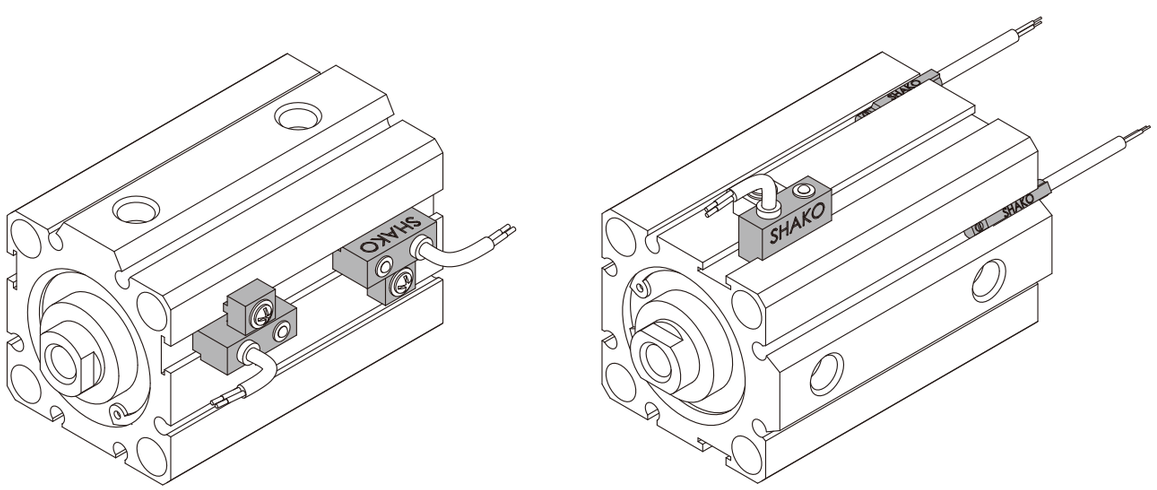

Theoretical force

Bore size	Rod diameter	Acting		Piston area mm²	Operating pressure kgf/cm² 1	2	3	4	5	6	7
ϕ 12	ϕ 6	Single acting		85	-	0.43	1.28	2.13	2.98	3.83	4.68
		Single acting		113	-	0.57	1.7	2.83	3.96	5.09	6.22
		Double acting	Push	85	-	2.26	3.39	4.52	5.65	6.78	7.91
			Pull	113	-	3.62	5.43	7.24	9.05	10.86	12.67
ϕ 16	ϕ 6	Single acting		201	-	1.01	3.02	4.03	7.04	9.05	11.06
		Single acting		173	-	0.87	2.6	4.33	6.06	7.79	9.52
		Double acting	Push	201	-	4.02	6.03	8.04	10.05	12.06	14.07
			Pull	173	-	3.46	5.19	6.92	8.65	10.38	12.11
ϕ 20	ϕ 8	Single acting		264	-	1.57	4.71	7.85	10.99	14.13	17.27
		Single acting		314	-	1.32	3.96	6.6	9.24	11.88	14.52
		Double acting	Push	264	-	6.28	9.42	12.56	15.7	18.84	21.98
			Pull	314	-	5.28	7.92	10.56	13.2	15.84	18.48
ϕ 25	ϕ 10	Single acting		490	-	2.45	7.35	12.25	17.15	22.05	26.95
		Single acting		412	-	2.06	6.18	10.3	14.42	18.54	22.66
		Double acting	Push	490	-	9.8	14.7	19.6	24.5	29.4	34.3
			Pull	412	-	8.24	12.36	16.48	20.6	24.72	28.84
ϕ 32	ϕ 12	Single acting		804	-	4.02	12.06	20.1	28.14	36.18	44.22
		Single acting		690	-	3.45	10.35	17.25	24.15	31.05	37.95
		Double acting	Push	804	-	16.08	24.12	32.16	40.2	48.24	56.28
			Pull	690	-	13.8	20.7	27.6	34.5	41.4	48.3
ϕ 40	ϕ 16	Single acting		1256	-	6.28	18.84	31.4	43.96	56.52	69.08
		Single acting		1055	-	5.28	15.83	26.38	36.93	47.48	58.03
		Double acting	Push	1256	12.56	25.12	37.68	50.24	62.8	75.36	87.92
			Pull	1055	10.55	21.1	31.65	42.2	52.75	63.3	73.85
ϕ 50	ϕ 20	Double acting	Push	1963	19.63	39.26	58.89	78.52	98.15	117.78	137.41
			Pull	1649	16.49	32.98	49.47	65.96	82.45	98.94	115.43
ϕ 63	ϕ 20	Double acting	Push	3117	31.17	62.34	93.51	124.68	155.85	187.02	218.19
			Pull	2803	28.03	56.06	84.09	112.12	140.15	168.18	196.21
ϕ 80	ϕ 25	Double acting	Push	5026	50.26	100.52	150.78	201.04	251.3	301.56	351.82
			Pull	4536	45.36	90.72	136.08	181.44	226.8	272.16	317.52
ϕ 100	ϕ 32	Double acting	Push	7853	78.53	157.06	235.59	314.12	392.65	471.18	549.71
			Pull	7049	70.49	140.98	211.47	281.96	352.45	422.94	493.43

Formula of cylinder acting force calculation

Formula of cylinder acting force calculation

$$F = P \times A - f$$

F : Cylinder acting force (N)

P : Operating pressure (Mpa)

A : Piston area (mm²)

f : Friction (N)

PNEUMATIC CYLINDER

Dimensions

JC Standard double acting

JC Standard double acting (ϕ 12 ~ ϕ 25)

ϕ 12

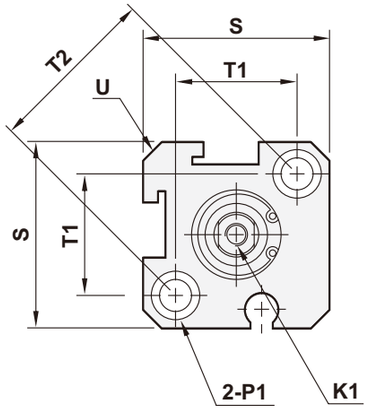

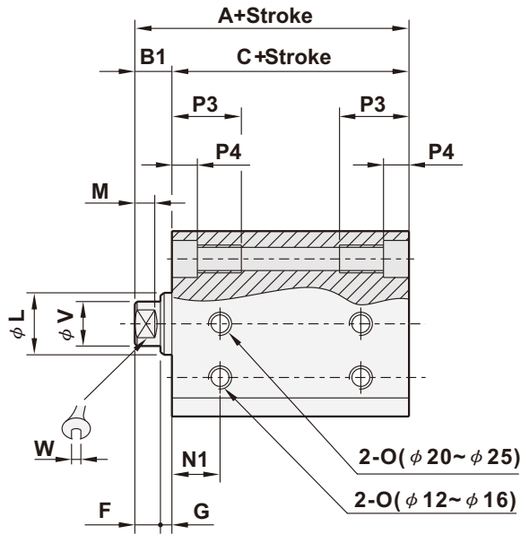

ϕ 16

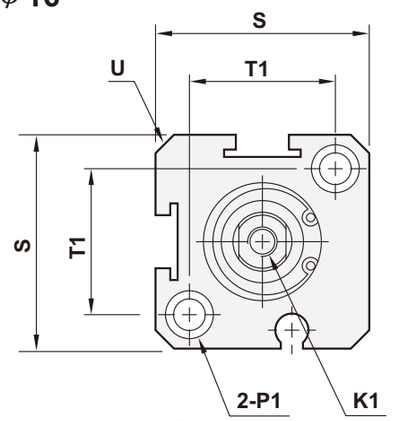

ϕ 20 ~ ϕ 25

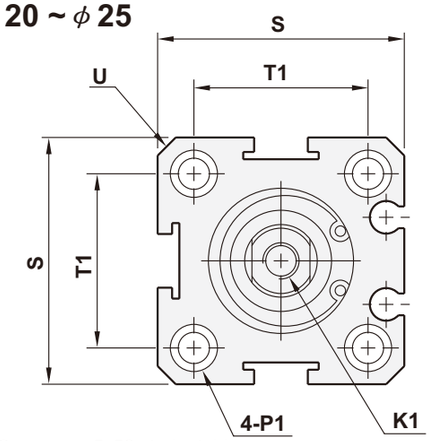

*Note: Please add extra 5mm into column A and C for the strokes marked ◎ on page 5-52 stroke table.
For more details, please refer to page 5-52.

(Unit: mm)

Bore size	W/O magnet			W/I magnet			D	F	G	K1	L	M	N1	O
	A	B1	C	A	B1	C								
ϕ 12	22	5	17	32	5	27	-	4	1	M3xP0.5xL6	ϕ 11	3	6.5	M5xP0.8
ϕ 16	24	5.5	18.5	34	5.5	28.5	-	4	1.5	M3xP0.5xL6	ϕ 11	3	7	M5xP0.8
ϕ 20	25	5.5	19.5	35	5.5	29.5	-	4	1.5	M4xP0.7xL8	ϕ 15	3	7.5	M5xP0.8
ϕ 25	27	6	21	37	6	31	-	4	2	M5xP0.8xL10	ϕ 17	3	7	M5xP0.8

Bore size	P1	P3	P4	R	S	T1	T2	U	V	W	X	Y
ϕ 12	Two sides ϕ 7.4 Thread M5xP0.8 Cross hole ϕ 4.3	12	4.5	-	25	16.3	23	R16	ϕ 6	5	-	-
ϕ 16	Two sides ϕ 7.4 Thread M5xP0.8 Cross hole ϕ 4.3	12	4.5	-	29	19.8	28	R19	ϕ 6	5	-	-
ϕ 20	Two sides ϕ 7.4 Thread M5xP0.8 Cross hole ϕ 4.3	14	4.5	-	34	24	-	R22	ϕ 8	6	-	-
ϕ 25	Two sides ϕ 9.0 Thread M6xP1.0 Cross hole ϕ 4.6	15	5.5	-	40	28	-	R25	ϕ 10	8	-	-

Dimensions

JC Standard double acting

JC Standard double acting (ϕ 32 ~ ϕ 100)

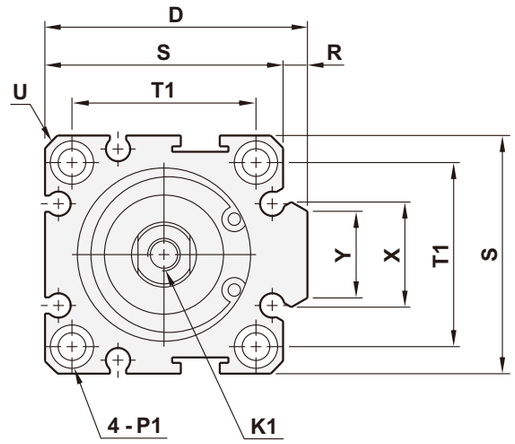

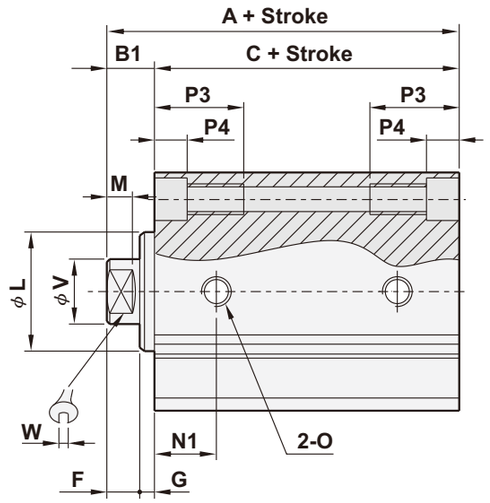

Piston rod with male thread

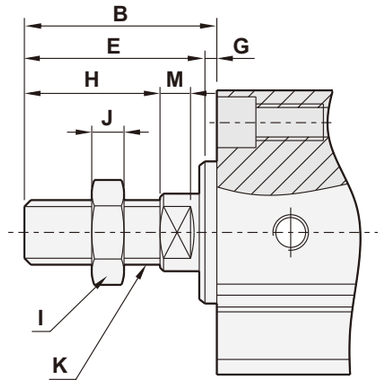

(Unit: mm)

Bore size	B	E	H	I	J	K
ϕ 12	17	16	10	8	4	M5xP0.8
ϕ 16	17.5	16	12	8	4	M5xP0.8
ϕ 20	20.5	19	15	10	5	M6xP1.0
ϕ 25	23	21	17	13	6	M8xP1.25
ϕ 32	25	22	18	17	6	M10xP1.25
ϕ 40	35	32	28	22	8	M14xP1.5
ϕ 50	37	33	28	27	6	M18xP1.5
ϕ 63	37	33	28	27	6	M18xP1.5
ϕ 80	44	39	33	32	8	M22xP1.5
ϕ 100	50	45	38	35	8	M26xP1.5

*Note: Please add extra 5mm into column A and C for the strokes marked ◎ on page 5-52 stroke table.
For more details, please refer to page 5-52.

(Unit: mm)

Bore size	W/O magnet			W/I magnet			D	F	G	K1	L	M	N1	O
	A	B1	C	A	B1	C								
ϕ 32	31.5	7	24.5	41.5	7	34.5	48.5	4	3	M6xP1.0xL12	ϕ 22	3	9	G 1/8
ϕ 40	33	7	26	43	7	36	56.5	4	3	M8xP1.25xL12	ϕ 28	3	10	G 1/8
ϕ 50	37	9	28	47	9	38	70	5	4	M10xP1.5xL15	ϕ 38	3	10	G 1/4
ϕ 63	41	9	32	51	9	42	83	5	4	M10xP1.5xL15	ϕ 40	3	12	G 1/4
ϕ 80	57	11	46	67	11	56	104	6	5	M14xP1.5xL20	ϕ 45	4	12.5	G 3/8
ϕ 100	68	12	56	78	12	66	124	7	5	M18xP1.5xL20	ϕ 55	4	17	G 3/8

Bore size	P1	P3	P4	R	S	T1	T2	U	V	W	X	Y
ϕ 32	Two sides ϕ 9.0 Thread M6xP1.0 Cross hole ϕ 4.6	16	5.5	4.5	44	34	-	R29.5	ϕ 12	10	18.8	16
ϕ 40	Two sides ϕ 10.5 Thread M8xP1.25 Cross hole ϕ 6.9	20	7.5	4.5	52	40	-	R35	ϕ 16	14	19	16
ϕ 50	Two sides ϕ 11 Thread M8xP1.25 Cross hole ϕ 6.9	25	8.5	8	62	48	-	R41	ϕ 20	17	26	19
ϕ 63	Two sides ϕ 11 Thread M8xP1.25 Cross hole ϕ 6.9	25	8.5	8	75	60	-	R50	ϕ 20	17	26	19
ϕ 80	Two sides ϕ 16.5 Thread M12xP1.75 Cross hole ϕ 10.5	25	10.5	10	94	74	-	R62	ϕ 25	22	37.5	26
ϕ 100	Two sides ϕ 18.5 Thread M14xP2 Cross hole ϕ 12.3	30	13	10	114	90	-	R75	ϕ 30	27	37.5	26

Dimensions

JCO Single acting/Spring extended (ϕ 12~ ϕ 50)

JCO Single acting/Spring extended (ϕ 12 ~ ϕ 25)

ϕ 12

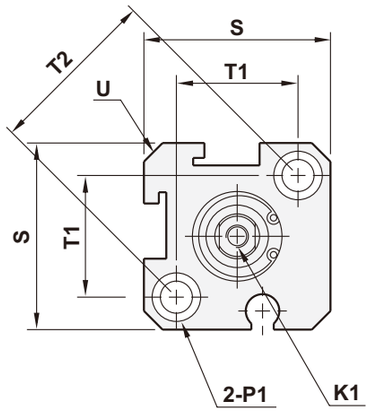

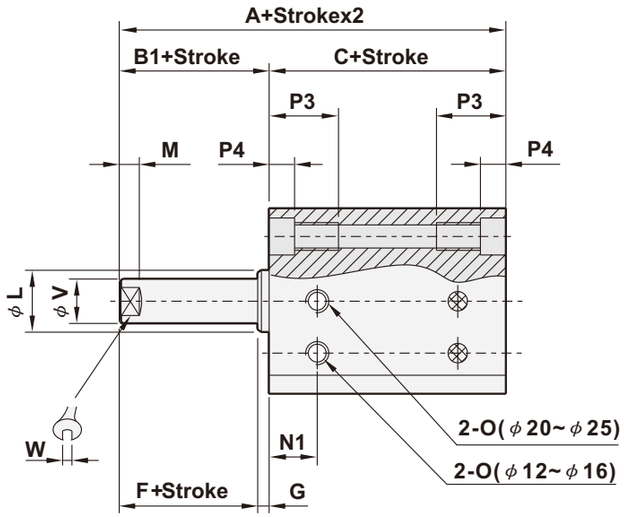

ϕ 16

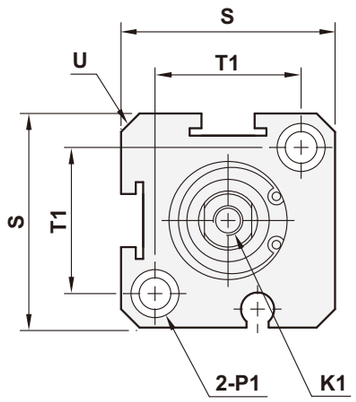

ϕ 20 ~ ϕ 25

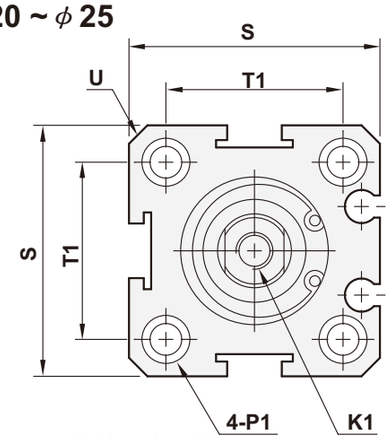

*Note: Please add extra 5mm into column A and C for the strokes marked ◎ on page 5-52 stroke table.
For more details, please refer to page 5-52.

(Unit: mm)

Bore size	W/O magnet			W/I magnet			D	F	G	K1	L	M	N1	O
	A	B1	C	A	B1	C								
ϕ 12	22	5	27	32	5	37	-	4	1	M3xP0.5xL6	ϕ 11	3	6.5	M5xP0.8
ϕ 16	24	5.5	18.5	34	5.5	28.5	-	4	1.5	M3xP0.5xL6	ϕ 11	3	7	M5xP0.8
ϕ 20	25	5.5	19.5	35	5.5	29.5	-	4	1.5	M4xP0.7xL8	ϕ 15	3	7.5	M5xP0.8
ϕ 25	27	6	21	37	6	31	-	4	2	M5xP0.8xL10	ϕ 17	3	8	M5xP0.8

Bore size	P1	P3	P4	R	S	T1	T2	U	V	W	X	Y
ϕ 12	Two sides ϕ 7.4 Thread M5xP0.8 Cross hole ϕ 4.3	12	4.5	-	25	16.3	23	R16	ϕ 6	5	-	-
ϕ 16	Two sides ϕ 7.4 Thread M5xP0.8 Cross hole ϕ 4.3	12	4.5	-	29	19.8	28	R19	ϕ 6	5	-	-
ϕ 20	Two sides ϕ 7.4 Thread M5xP0.8 Cross hole ϕ 4.3	14	4.5	-	34	24	-	R22	ϕ 8	6	-	-
ϕ 25	Two sides ϕ 9.0 Thread M6xP1.0 Cross hole ϕ 4.6	15	5.5	-	40	28	-	R25	ϕ 10	8	-	-

Dimensions

JCO Single acting/Spring extended (ϕ 12~ ϕ 50)

JCO Single acting/Spring extended (ϕ 32 ~ ϕ 50)

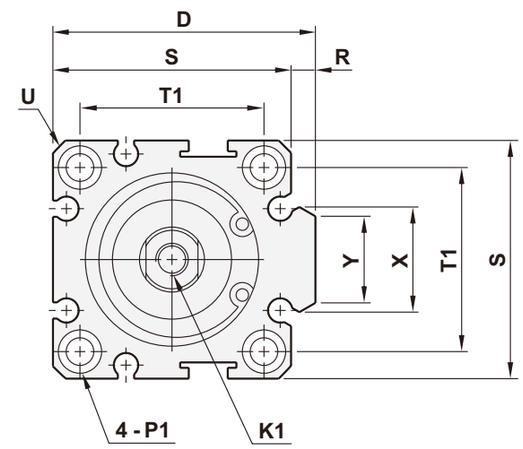

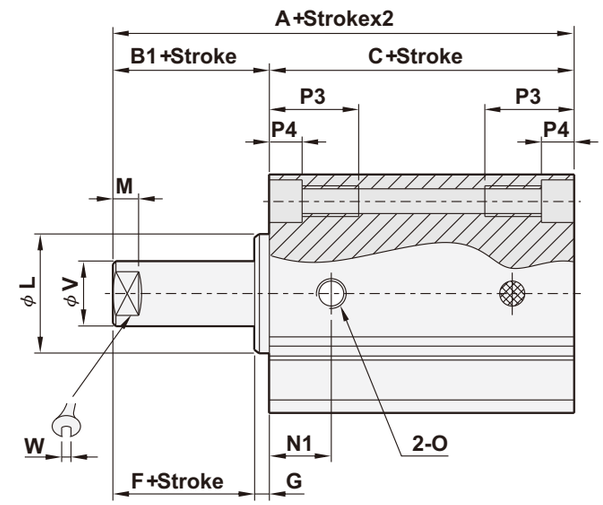

Piston rod with male thread

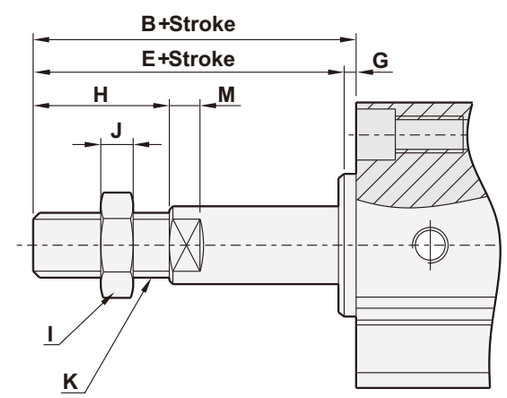

(Unit: mm)

Bore size	B	E	H	I	J	K
ϕ 12	17	16	10	8	4	M5xP0.8
ϕ 16	17.5	16	12	8	4	M5xP0.8
ϕ 20	20.5	19	15	10	5	M6xP1.0
ϕ 25	23	21	17	13	6	M8xP1.25
ϕ 32	25	22	18	17	6	M10xP1.25
ϕ 40	35	32	28	22	8	M14xP1.5
ϕ 50	37	33	28	27	6	M18xP1.5

*Note: Please add extra 5mm into column A and C for the strokes marked ◎ on page 5-52 stroke table.
For more details, please refer to page 5-52.

(Unit: mm)

Bore size	W/O magnet			W/I magnet			D	F	G	K1	L	M	N1	O
	A	B1	C	A	B1	C								
ϕ 32	41.5	7	34.5	51.5	7	44.5	48.5	4	3	M6xP1.0xL12	ϕ 22	3	9	G 1/8
ϕ 40	43	7	36	53	7	46	56.5	4	3	M8xP1.25xL12	ϕ 28	3	10	G 1/8
ϕ 50	47	9	38	57	9	48	70	5	4	M10xP1.5xL15	ϕ 38	3	10	G 1/4

Bore size	P1	P3	P4	R	S	T1	T2	U	V	W	X	Y
ϕ 32	Two sides ϕ 9.0 Thread M6xP1.0 Cross hole ϕ 4.6	16	5.5	4.5	44	34	-	R29.5	ϕ 12	10	19.5	16
ϕ 40	Two sides ϕ 10.5 Thread M8xP1.25 Cross hole ϕ 6.9	20	7.5	4.5	52	40	-	R35	ϕ 16	14	19.5	16
ϕ 50	Two sides ϕ 11 Thread M8xP1.25 Cross hole ϕ 6.9	25	8.5	8	62	48	-	R41	ϕ 20	17	26.5	19

Dimensions

JCI Single acting/Spring return (ϕ 12~ ϕ 50)

JCI Single acting/Spring return (ϕ 12 ~ ϕ 25)

ϕ 12

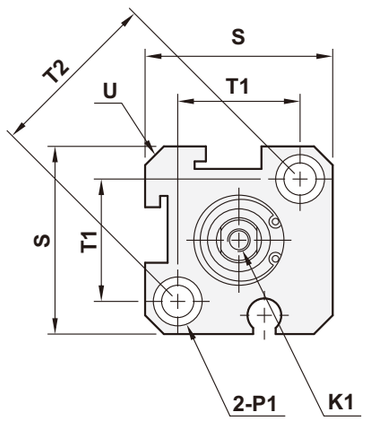

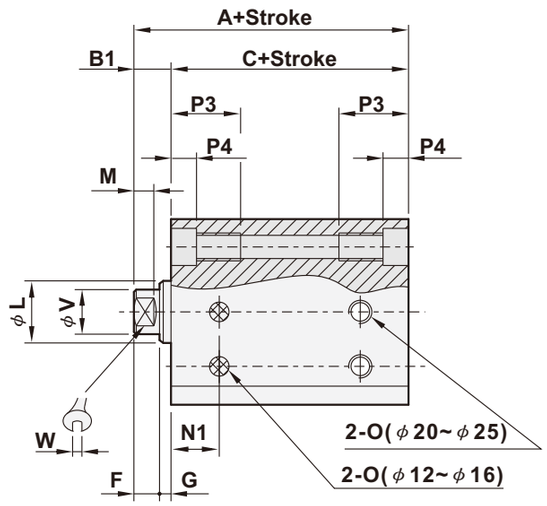

ϕ 16

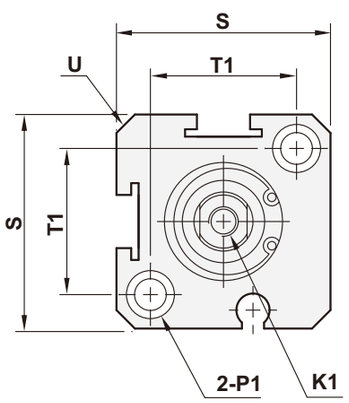

ϕ 20 ~ ϕ 25

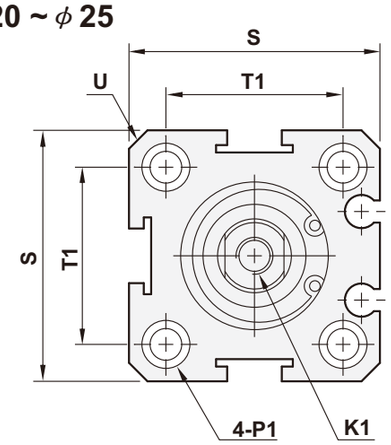

*Note: Please add extra 5mm into column A and C for the strokes marked ◎ on page 5-52 stroke table.
For more details, please refer to page 5-52.

(Unit: mm)

Bore size	W/O magnet			W/I magnet			D	F	G	K1	L	M	N1	O
	A	B1	C	A	B1	C								
ϕ 12	32	5	27	42	5	37	-	4	1	M3xP0.5xL6	φ11	3	6.5	M5xP0.8
ϕ 16	34	5.5	28.5	44	5.5	38.5	-	4	1.5	M3xP0.5xL6	φ11	3	7	M5xP0.8
ϕ 20	35	5.5	29.5	45	5.5	39.5	-	4	1.5	M4xP0.7xL8	φ15	3	7.5	M5xP0.8
ϕ 25	37	6	31	47	6	41	-	4	2	M5xP0.8xL10	φ17	3	8	M5xP0.8

Bore size	P1	P3	P4	R	S	T1	T2	U	V	W	X	Y
ϕ 12	Two sides ϕ 7.4 Thread M5xP0.8 Cross hole ϕ 4.3	12	4.5	-	25	16.3	23	R16	ϕ 6	5	-	-
ϕ 16	Two sides ϕ 7.4 Thread M5xP0.8 Cross hole ϕ 4.3	12	4.5	-	29	19.8	28	R19	ϕ 6	5	-	-
ϕ 20	Two sides ϕ 7.4 Thread M5xP0.8 Cross hole ϕ 4.3	14	4.5	-	34	24	-	R22	ϕ 8	6	-	-
ϕ 25	Two sides ϕ 9.0 Thread M6xP1.0 Cross hole ϕ 4.6	15	5.5	-	40	28	-	R25	ϕ 10	8	-	-

Dimensions

JCI Single acting/Spring return (ϕ 12~ ϕ 50)

JCI Single acting/Spring return (ϕ 32 ~ ϕ 50)

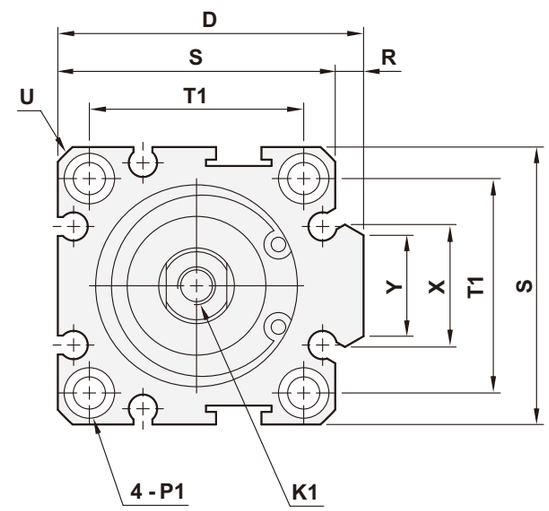

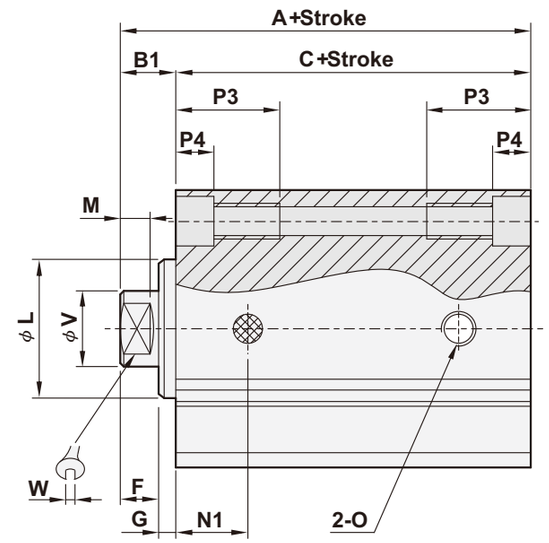

Piston rod with male thread

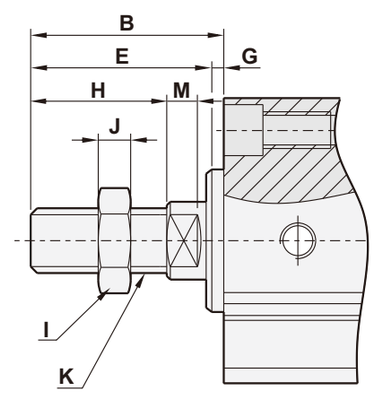

(Unit: mm)

Bore size	B	E	H	I	J	K
ϕ 12	17	16	10	8	4	M5xP0.8
ϕ 16	17.5	16	12	8	4	M5xP0.8
ϕ 20	20.5	19	15	10	5	M6xP1.0
ϕ 25	23	21	17	12	5	M8xP1.25
ϕ 32	25	22	18	14	6	M10xP1.25
ϕ 40	35	32	28	19	8	M14xP1.5
ϕ 50	37	33	28	27	6	M18xP1.5

*Note: Please add extra 5mm into column A and C for the strokes marked ◎ on page 5-52 stroke table.
For more details, please refer to page 5-52.

(Unit: mm)

Bore size	W/O magnet			W/I magnet			D	F	G	K1	L	M	N1	O
	A	B1	C	A	B1	C								
ϕ 32	41.5	7	34.5	51.5	7	44.5	48.5	4	3	M6xP1.0xL12	ϕ 22	3	9	G 1/8
ϕ 40	43	7	36	53	7	46	56.5	4	3	M8xP1.25xL12	ϕ 28	3	10	G 1/8
ϕ 50	47	9	38	57	9	48	70	5	4	M10xP1.5xL15	ϕ 38	3	10	G 1/4

Bore size	P1	P3	P4	R	S	T1	T2	U	V	W	X	Y
ϕ 32	Two sides ϕ 9.0 Thread M6xP1.0 Cross hole ϕ 4.6	16	5.5	4.5	44	34	-	R29.5	ϕ 12	10	19.5	16
ϕ 40	Two sides ϕ 10.5 Thread M8xP1.25 Cross hole ϕ 6.9	20	7.5	4.5	52	40	-	R35	ϕ 16	14	19.5	16
ϕ 50	Two sides ϕ 11 Thread M8xP1.25 Cross hole ϕ 6.9	25	8.5	8	62	48	-	R41	ϕ 20	17	26.5	19

Dimensions

JCD Double rod/Double acting (ϕ 20~ ϕ 25)

JCD Double rod/Double acting (ϕ 20 ~ ϕ 25)

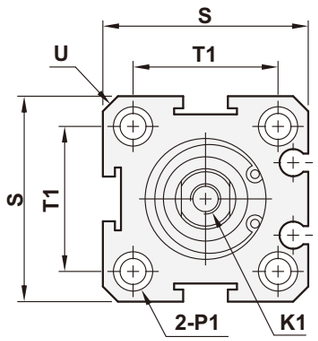

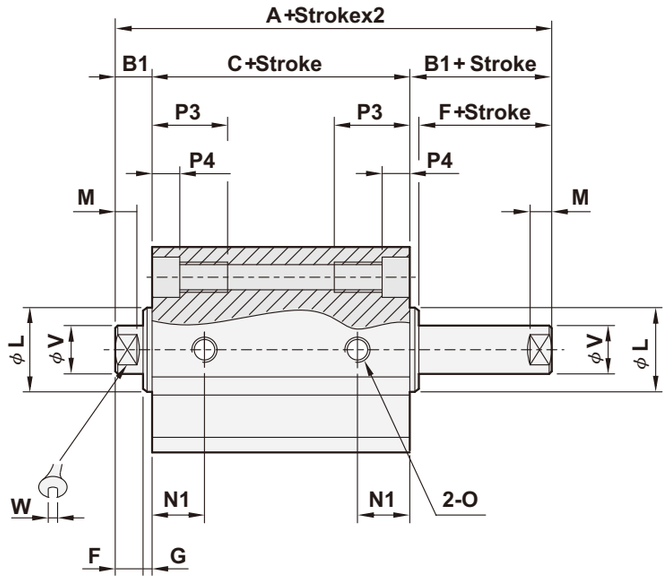

Piston rod with male thread

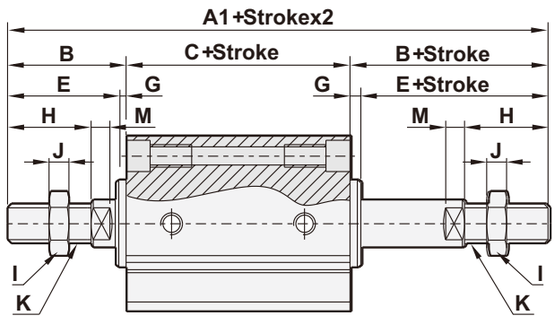

(Unit: mm)

Bore size	A1	B	E	H	I	J	K
ϕ 20	60.5	19	19	15	10	5	M6xP1.0
ϕ 25	67	21	21	17	13	6	M8xP1.25
ϕ 32	74.5	22	22	18	17	6	M10xP1.25
ϕ 40	96	32	32	28	22	8	M14xP1.5
ϕ 50	102	33	33	28	27	6	M18xP1.5
ϕ 63	106	33	33	28	27	6	M18xP1.5
ϕ 80	134	39	39	33	32	8	M22xP1.5
ϕ 100	156	45	45	38	35	8	M26xP1.5

REMARK: A1 dimension is increased of 10 mm for magnet type

*Note: Please add extra 5mm into column A and C for the strokes marked ◎ on page 5-52 stroke table.
For more details, please refer to page 5-52.

(Unit: mm)

Bore size	W/O magnet			W/I magnet			D	F	G	K1	L	M	N1	O
	A	B1	C	A	B1	C								
ϕ 20	25	5.5	19.5	35	5.5	29.5	-	4	1.5	M4xP0.7xL8	ϕ 15	3	7.5	M5xP0.8
ϕ 25	27	6	21	37	6	31	-	4	2	M5xP0.8xL10	ϕ 17	3	8	M5xP0.8

Bore size	P1	P3	P4	R	S	T1	U	V	W	X	Y
ϕ 20	Two sides ϕ 7.4 Thread M5xP0.8 Cross hole ϕ 4.3	14	4.5	-	34	24	R22	ϕ 8	6	-	-
ϕ 25	Two sides ϕ 9.0 Thread M6xP1.0 Cross hole ϕ 4.6	15	5.5	-	40	28	R25	ϕ 10	8	-	-

Dimensions

JCD Double rod/Double acting (ϕ 32~ ϕ 100)

JCD Double rod/Double acting (ϕ 32 ~ ϕ 100)

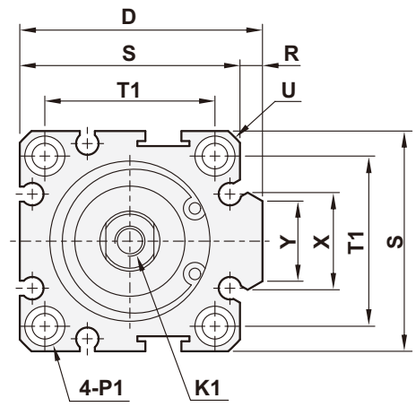

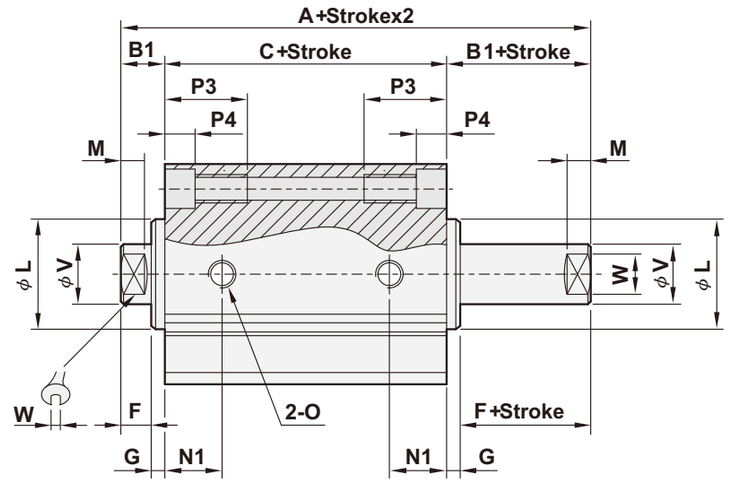

*Note: Please add extra 5mm into column A and C for the strokes marked ◎ on page 5-52 stroke table.
For more details, please refer to page 5-52.

(Unit: mm)

Bore size	W/O magnet			W/I magnet			D	F	G	K1	L	M	N1	O
	A	B1	C	A	B1	C								
ϕ 32	31.5	7	24.5	41.5	7	34.5	48.5	4	3	M6xP1.0xL12	ϕ 22	3	9	G 1/8
ϕ 40	33	7	26	43	7	36	56.5	4	3	M8xP1.25xL12	ϕ 28	3	10	G 1/8
ϕ 50	37	9	28	47	9	38	70	5	4	M10xP1.5xL15	ϕ 38	3	10	G 1/4
ϕ 63	41	9	32	51	9	42	83	5	4	M10xP1.5xL15	ϕ 40	3	12	G 1/4
ϕ 80	57	11	46	67	11	56	104	6	5	M14xP1.5xL20	ϕ 45	4	12.5	G 3/8
ϕ 100	68	12	56	78	12	66	124	7	5	M18xP1.5xL20	ϕ 55	4	17	G 3/8

Bore size	P1	P3	P4	R	S	T1	U	V	W	X	Y
ϕ 32	Two sides ϕ 9.0 Thread M6xP1.0 Cross hole ϕ 4.6	16	5.5	4.5	44	34	R29.5	ϕ 12	10	18.8	16
ϕ 40	Two sides ϕ 10.5 Thread M8xP1.25 Cross hole ϕ 6.9	20	7.5	4.5	52	40	R35	ϕ 16	14	19	16
ϕ 50	Two sides ϕ 11 Thread M8xP1.25 Cross hole ϕ 6.9	25	8.5	8	62	48	R41	ϕ 20	17	26	19
ϕ 63	Two sides ϕ 11 Thread M8xP1.25 Cross hole ϕ 6.9	25	8.5	8	75	60	R50	ϕ 20	17	26	19
ϕ 80	Two sides ϕ 16.5 Thread M12xP1.75 Cross hole ϕ 10.5	25	10.5	10	94	74	R62	ϕ 25	22	37.5	26
ϕ 100	Two sides ϕ 18.5 Thread M14xP2 Cross hole ϕ 12.3	30	13	10	114	90	R75	ϕ 30	27	37.5	26

Dimensions

JCA, JCB Stroke adjustable type(ϕ 20~ ϕ 25)
(Adjustable stroke: JCA 0~25mm, JCB 0~50mm)

JCA, JCB Stroke adjustable 25mm, 50mm
(ϕ 20~ ϕ 25)

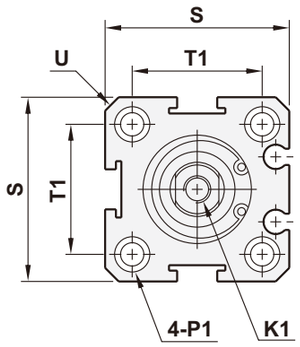

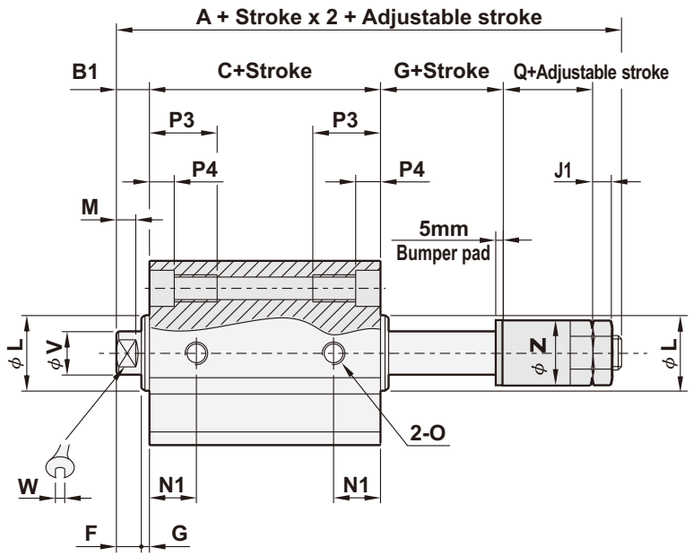

Piston rod with male thread

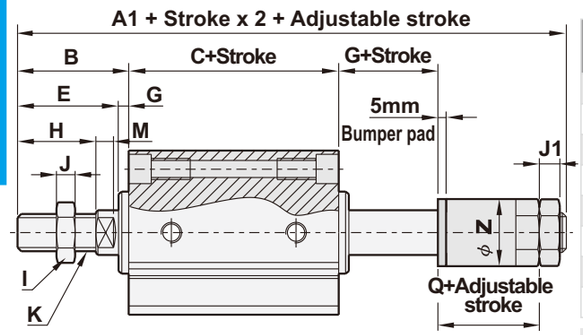

(Unit: mm)

Bore size	A1	B	E	H	I	J	K
ϕ 20	74.5	20.5	19	15	10	5	M6xP1.0
ϕ 25	80	23	21	17	13	6	M8xP1.25
ϕ 32	87.5	25	22	18	17	6	M10xP1.25
ϕ 40	99	35	32	28	22	8	M14xP1.5
ϕ 50	110	37	33	28	27	6	M18xP1.5
ϕ 63	114	37	33	28	27	6	M18xP1.5
ϕ 80	142	44	39	33	32	8	M22xP1.5
ϕ 100	159	50	45	38	35	8	M26xP1.5

REMARK: A1 dimension is increased of 10 mm for magnet type

*Note: Please add extra 5mm into column A and C for the strokes marked ◎ on page 5-52 stroke table.
For more details, please refer to page 5-52.

(Unit: mm)

Bore size	W/O magnet			W/I magnet			D	F	G	J1	K1	L	M	N1	O
	A	B1	C	A	B1	C									
ϕ 20	59.5	5.5	19.5	69.5	5.5	29.5	-	4	1.5	5	M4xP0.7xL8	ϕ 15	3	7.5	M5xP0.8
ϕ 25	63	6	21	73	6	31	-	4	2	5	M5xP0.8xL10	ϕ 17	3	8	M5xP0.8

Bore size	P1	P3	P4	Q	R	S	T1	U	V	W	X	Y	Z
ϕ 20	Two sides ϕ 7.4 Thread M5xP0.8 Cross hole ϕ 4.3	14	4.5	25	-	34	24	R22	ϕ 8	6	-	-	ϕ 19
ϕ 25	Two sides ϕ 9.0 Thread M6xP1.0 Cross hole ϕ 4.6	15	5.5	25	-	40	28	R25	ϕ 10	8	-	-	ϕ 19

Dimensions

JCA, JCB Stroke adjustable type(ϕ 32~ ϕ 100)
(Adjustable stroke: JCA 0~25mm, JCB 0~50mm)

JCA, JCB Stroke adjustable 25mm, 50mm
(ϕ 32~ ϕ 100)

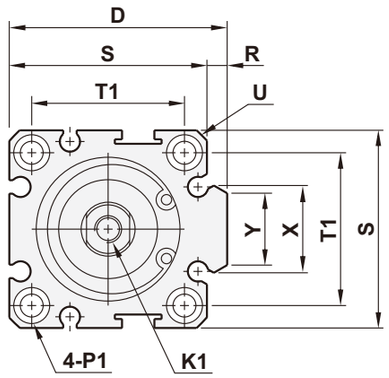

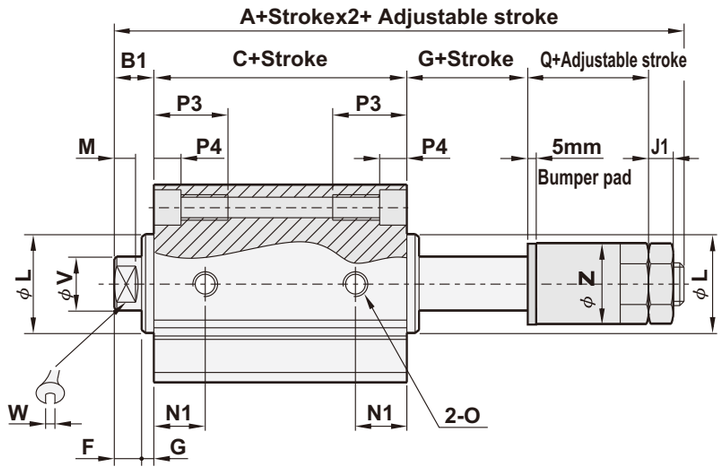

*Note: Please add extra 5mm into column A and C for the strokes marked ◎ on page 5-52 stroke table.
For more details, please refer to page 5-52.

(Unit: mm)

Bore size	W/O magnet			W/I magnet			D	F	G	J1	K1	L	M	N1	O
	A	B1	C	A	B1	C									
ϕ 32	69.5	7	24.5	79.5	7	34.5	48.5	4	3	6	M6xP1.0xL12	22	3	9	G 1/8
ϕ 40	71	7	26	81	7	36	56.5	4	3	7	M8xP1.25xL12	28	3	10	G 1/8
ϕ 50	82	9	28	92	9	38	70	5	4	8	M10xP1.5xL15	38	3	10	G 1/4
ϕ 63	86	9	32	96	9	42	83	5	4	8	M10xP1.5xL15	40	3	12	G 1/4
ϕ 80	109	11	46	119	11	56	104	6	5	10	M14xP1.5xL20	45	4	12.5	G 3/8
ϕ 100	121	12	56	131	12	66	124	7	5	10	M18xP1.5xL20	55	4	17	G 3/8

Bore size	P1	P3	P4	Q	R	S	T1	U	V	W	X	Y	Z
ϕ 32	Two sides ϕ 9.0 Thread M6xP1.0 Cross hole ϕ 4.6	16	5.5	22	4.5	44	34	R29.5	12	10	18.8	16	ϕ 25
ϕ 40	Two sides ϕ 10.5 Thread M8xP1.25 Cross hole ϕ 6.9	20	7.5	22	4.5	52	40	R35	16	14	19	16	ϕ 30
ϕ 50	Two sides ϕ 11 Thread M8xP1.25 Cross hole ϕ 6.9	25	8.5	28	8	62	48	R41	20	17	26	19	ϕ 40
ϕ 63	Two sides ϕ 11 Thread M8xP1.25 Cross hole ϕ 6.9	25	8.5	28	8	75	60	R50	20	17	26	19	ϕ 40
ϕ 80	Two sides ϕ 16.5 Thread M12xP1.75 Cross hole ϕ 10.5	25	10.5	35	10	94	74	R62	25	22	37.5	26	ϕ 40
ϕ 100	Two sides ϕ 18.5 Thread M14xP2 Cross hole ϕ 12.3	30	13	35	10	114	90	R75	30	27	37.5	26	ϕ 40