MCX Series Double Rod Slide Cylinder

Features

1. Integration of working table and cylinder body, suitable for precision assembly line.
2. Sensor groove design on cylinder body for saving space.
3. Built-in Magnet.

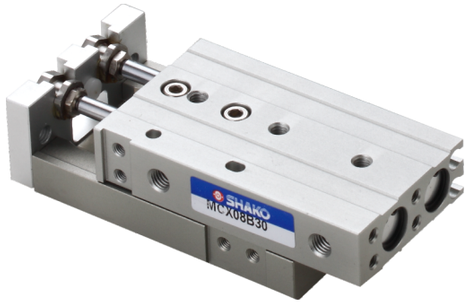

How to order

MCX	06	B10	SR	D	1
Double rod slide cylinder	Bore size	Stroke	Sensor	Type	Number of sensor
	06:Ø6 **08**:Ø8		**Black**:W/O sensor **SR**:Round type  AL-07 **SU**:Square type  AL-16	**Blank**:Reed switch **D**:NPN **E**:PNP	1 pc 2 pcs

*Sensor please refer to P3-191,P3-193

Stroke table

Bore size	Stroke table (mm)
Ø6	10, 20, 30, 40, 50
Ø8	10, 20, 30, 40, 50, 75

Specifications

Bore size	Ø6	Ø8
Port size	M3xP0.5	M5xP0.8
Fluid	Compressed air	
Acting	Double acting	
Operating pressure range	1.5 ~ 7 kgf/cm²	
Max operating pressure	10 kgf/cm²	
Cushion	Rubber	
Sensor switch	AL-07R	
Ambient temperature	-5°C ~ 60°C	
Piston speed	50 ~ 500mm/Sec.	

Dimensions

MCX6

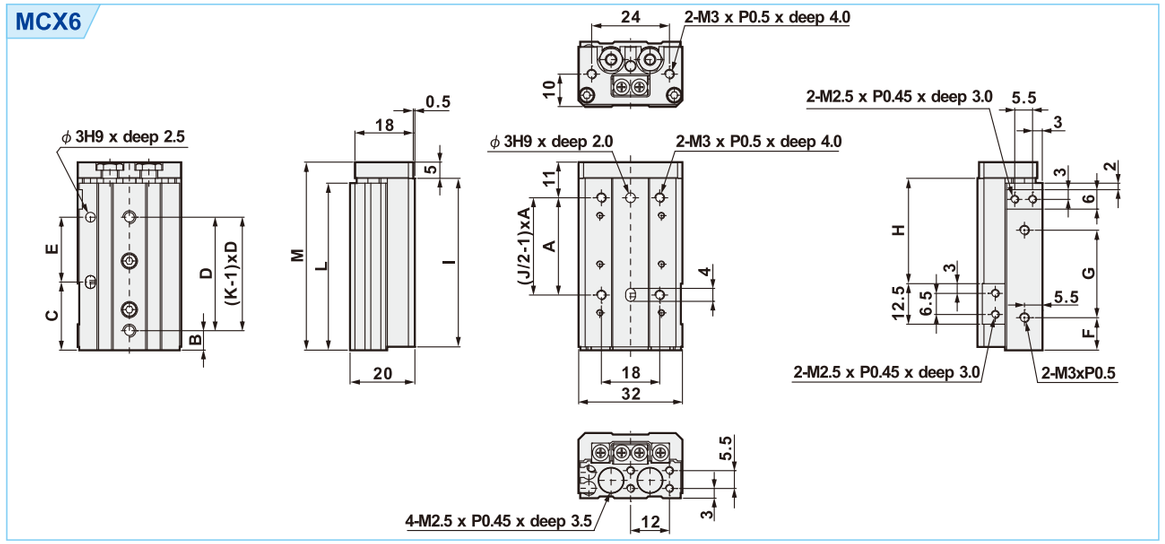

(Unit: mm)

Stroke	A	B	C	D	E	F	G	H	I	J	K	L	M
10	20	6	11	25	20	10	17	22.5	42	4	2	41.5	48
20	30	6	21	35	20	10	27	32.5	52	4	2	51.5	58
30	20	11	31	20	20	7	40	42.5	62	6	3	61.5	68
40	28	13	43	30	30	19	50	52.5	84	6	3	83.5	90
50	38	17	41	24	48	25	60	62.5	100	6	4	99.5	106

MCX8

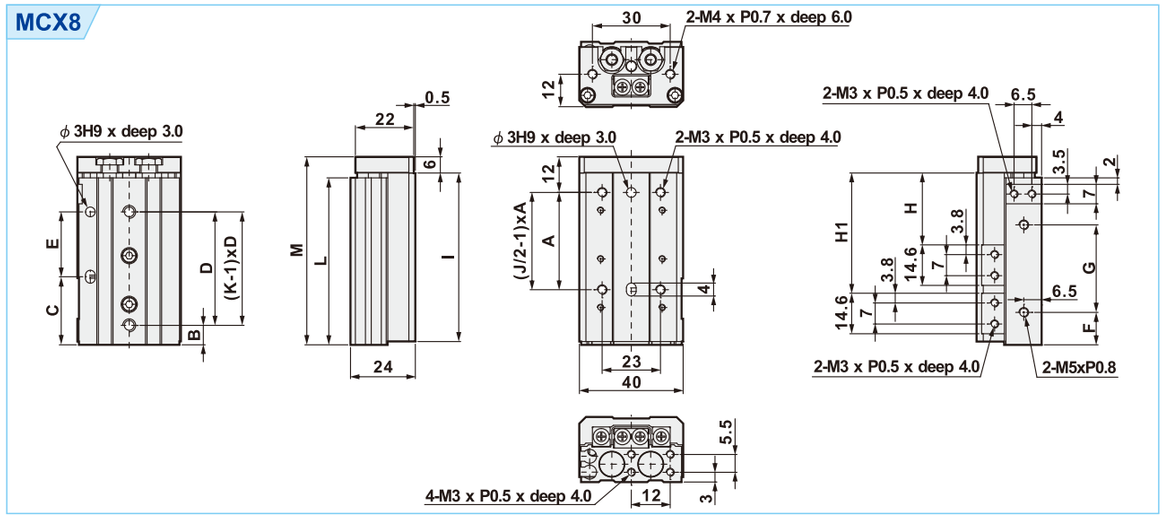

(Unit: mm)

Stroke	A	B	C	D	E	F	G	H	H1	I	J	K	L	M
10	25	9	17	28	20	13	19.5	23.5	—	49	4	2	48.5	56
20	25	12	12	30	30	8.5	29	33.5	—	54	4	2	53.5	61
30	40	13	33	20	20	9.5	39	43.5	—	65	4	3	64.5	72
40	50	15	43	28	28	10.5	56	53.5	—	83	4	3	82.5	90
50	38	20	43	23	46	24.5	60	63.5	82.5	101	6	4	100.5	108
75	50	27	83	28	56	38.5	96	88.5	132.5	151	6	5	150.5	158

MCF Series Compact Slide Cylinder

Features

1. High precise linear guiding rail provides low friction and quick response.
2. Integration of guiding rail and cylinder body for space saving.
3. Position port on slide table ensures high precise placement for repeated mounting.
4. Left or right slide type for selection.
5. Stroke adjustable screw and shock absorber are optional accessories.

How to order

MCFR	10	B50	A	SR	D	1
Type	Bore size	Stroke	Cushion	Sensor	Type	Number of sensor
MCFR:Right slide **MCFL** :Left slide	**10**:Ø10 **16**:Ø16	**Ø10**:30,50 **Ø16**:30,50,75,100	**Blank**:W/O cushion **A**:Stroke adjuster on both ends **AS**:Stroke adjuster on front end **AF**:Stroke adjuster on rear end **B**:Shock absorber on both ends **BS**:Shock absorber on front end **BF**:Shock absorber on rear end	**Black**:W/O sensor **SR** :Round type 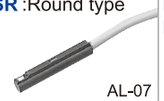 AL-07 **SU** :Square type  AL-16	**Blank**:Reed switch **D**:NPN **E**:PNP	1 pc 2 pcs

*Sensor please refer to P3-191,P3-193
*Please refer to P6-22 "SHOCK ABSORBER" for specification of shock absorber Ø10:DA0806-NC, Ø16:DA1008-NC

Specifications

Bore size	Ø10	Ø16
Port size	M5xP0.8	
Fluid	Compressed air (lubrication free)	
Acting	Double acting	
Operating pressure range	1.5 ~ 9 kgf/cm²	
Proof pressure	10 kgf/cm²	
Stroke adjustable range	0 ~ 10mm	
Magnet	Built-in	
Cushion	Rubber	
Ambient temperature	-5°C ~ 60°C(Unfrozen)	
Piston speed mm/Sec	50 ~ 500	

Dimensions

MCFR(L)10

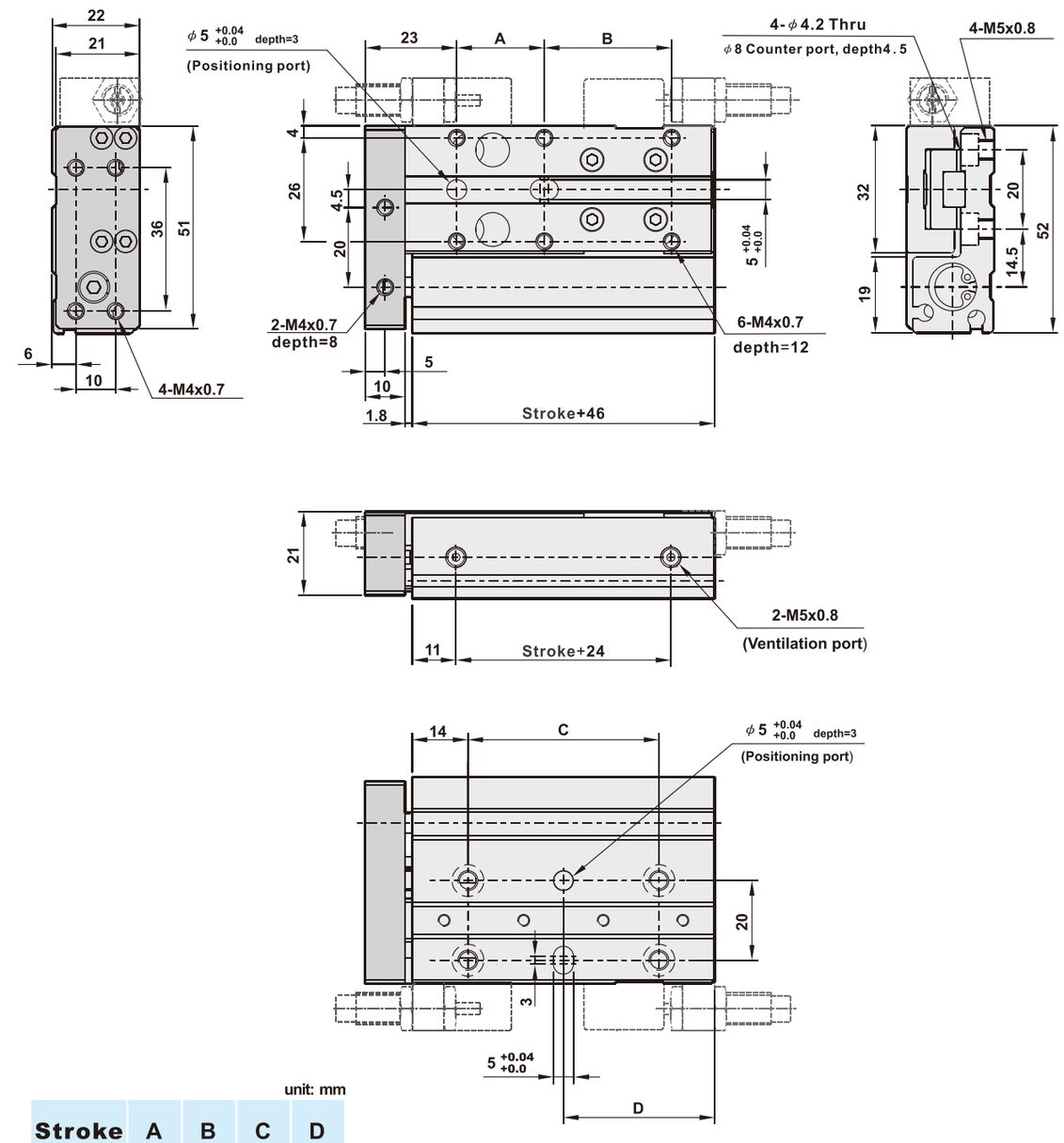

unit: mm

Stroke	A	B	C	D
30	22	32	48	38
50	32	42	68	48

Dimensions

MCFR(L)16

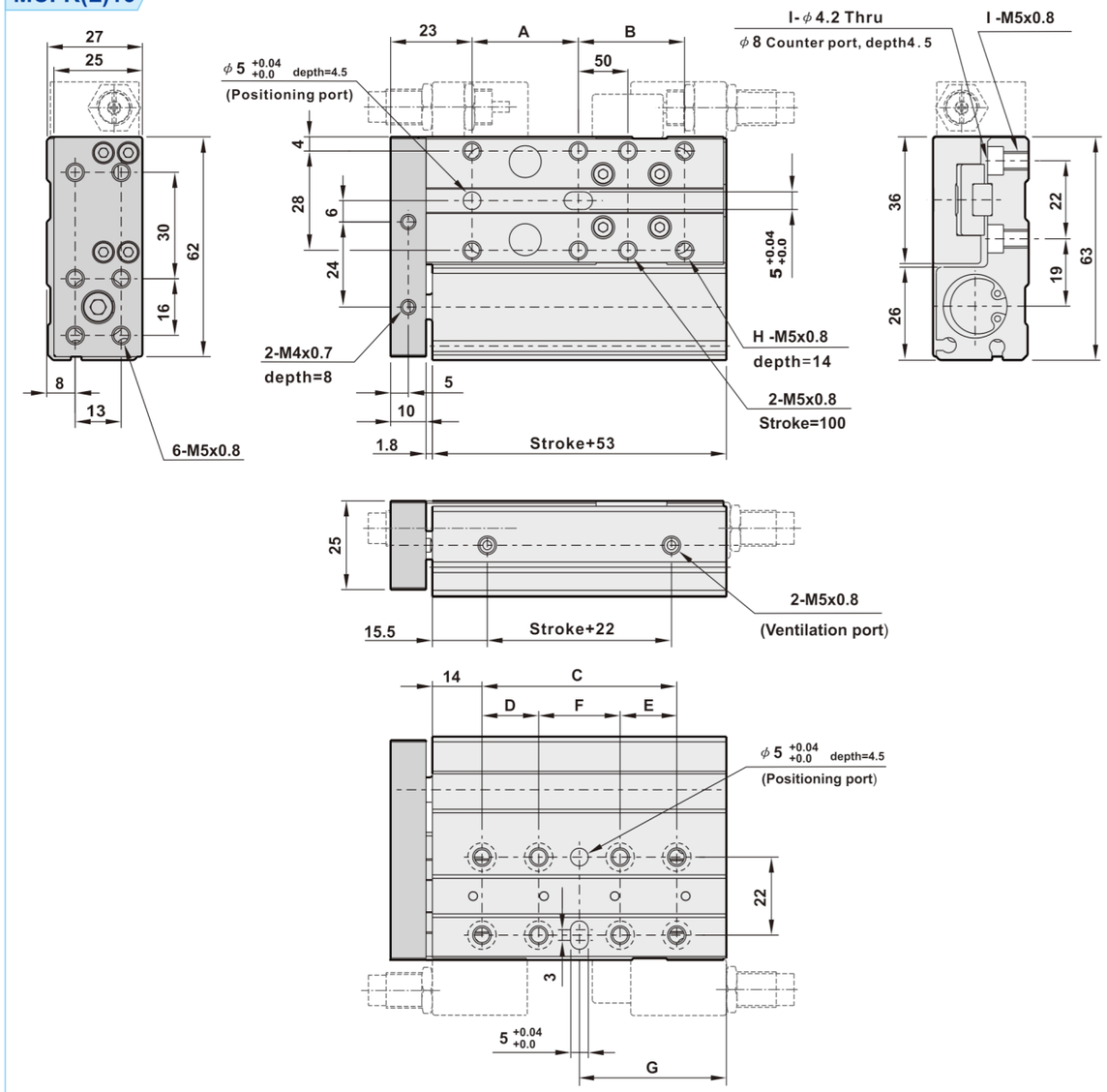

unit: mm

Stroke	A	B	C	D	E	F	G	H	I
30	30	30	55	—	---	—	41.5	6	4
50	50	30	75	---	---	---	51.5	6	4
75	50	55	100	32	32	36	64	6	8
100	50	80	125	45	40	40	76.5	8	8

Material of parts

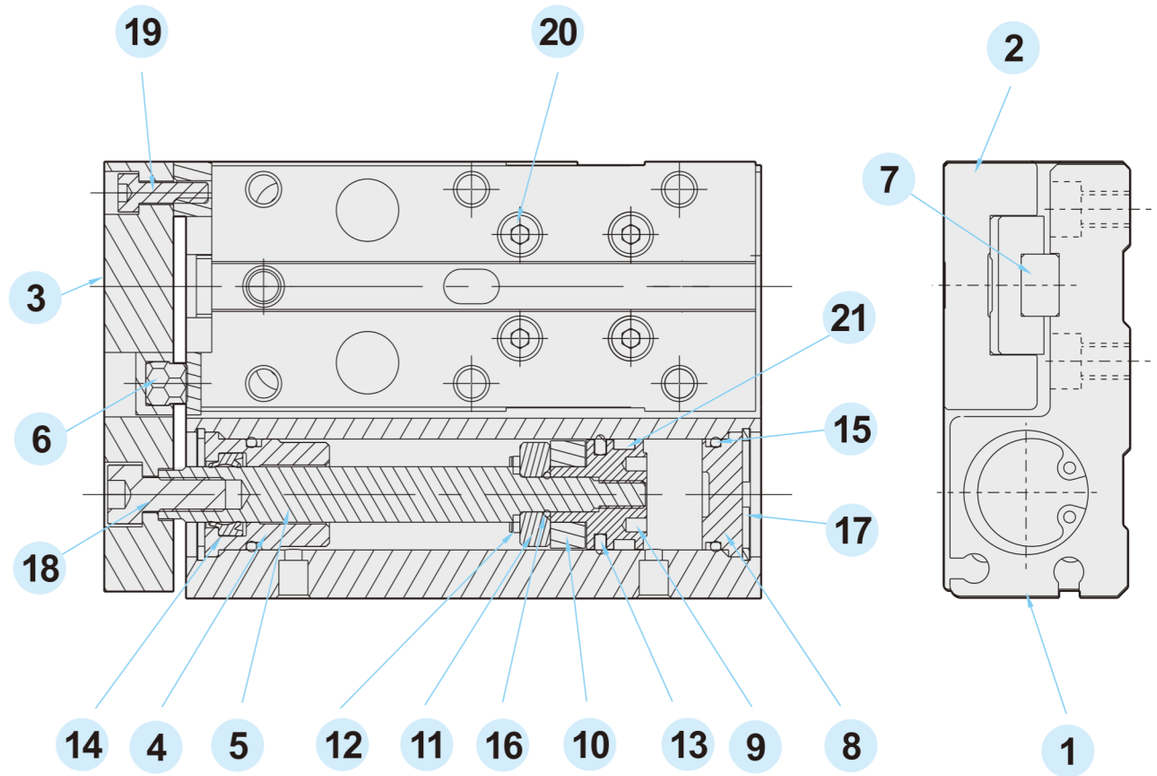

No.	Description	Material	Qty.	No.	Description	Material	Qty.
1	Body	Aluminum alloy	1	12	Cushion pad	NBR	1
2	Slide table	Aluminum alloy	1	13	U-Piston seal	NBR	1
3	Front plate	Aluminum alloy	1	14	Rod seal	NBR	1
4	Front cover	Aluminum alloy	1	15	O-ring 1	NBR	2
5	Piston rod	S45C+Cr	1	16	O-ring 2	NBR	1
6	Front plate cushion pad	NBR	1	17	C type clip	Fe+Ni	2
7	Mini linear rail	Bearing steel	1	18	Hex. Fixing bolt 1	Fe+Ni	1
8	Rear cover	Aluminum alloy	1	19	Hex. Fixing bolt 2	Fe+Ni	4
9	Piston A	Aluminum alloy	1	20	Hex. Fixing bolt 3	Fe+Ni	8
10	Magnet	Rubber	1	21	Wear ring	Plastic	1
11	Piston B	Aluminum alloy	1				

■ Formula for allowable static load

Pitch moment $Fp = \frac{Mp \times 1000}{(L1+A)}$

Yaw moment $Fy = \frac{My \times 1000}{(L1+A)}$

Roll moment $Fr = \frac{Mr \times 1000}{L2}$

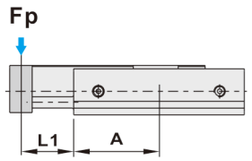

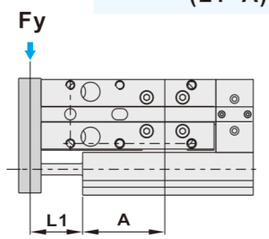

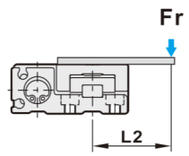

L1: Distance between body and load point
A : Distance between body and the center of rail
L2: Distance between loading point (Fr) and the center of rail

N-m(kgf-m)

Bore size(mm)		ϕ 10	ϕ 16
Mp	Pitch moment torque	16.67(1.63)	16.67(1.63)
My	Yam moment torque	16.67(1.63)	16.67(1.63)
Mr	Roll moment torque	14.7(1.44)	14.7(1.44)

●**Note**:
Do not exceed load limit, or the accuracy of guiding rail will be affected.Avoid impact with great force on the cylinder.
The inertia load must be within 1/10 of allowable static load.

■ Mounting example

Top face mounting	Bottom face mounting
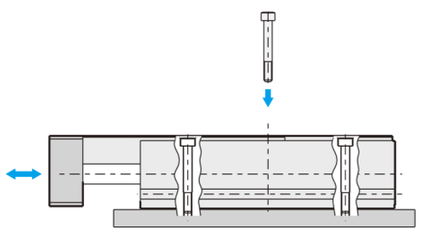	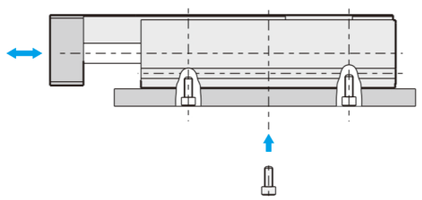

■ Installation example of cushion device

MCFR type

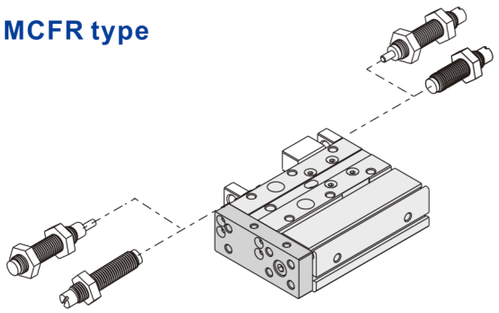

MCFL type

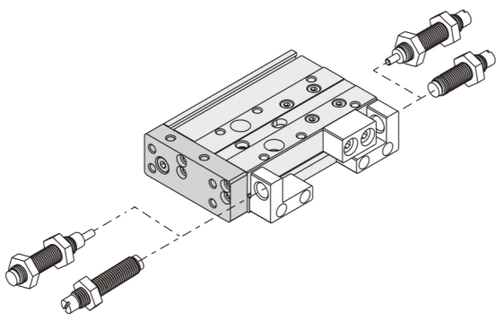

Memo..

JQM Series Guide Jig Cylinder

Features

1. Hard anodized aluminum barrel provides corrosion and wear resistance as well as long life.
2. Compact size and space saving.
3. Strict quality control ensures the product in stability and excellent performance.
4. Simple maintenance and installation.
5. Different bore sizes and strokes for selection.
6. Various sensor switches are available.
7. Possess excellent bending and twisting resistance for heavier side load.

How to order

JQM	32	B50	H	M	SR	D	1
Type	**Bore size**	**Stroke**	**Rod thread**	**Magnet**	**Sensor**	**Type**	**Number of sensor**
JQM:Standard double acting	12:Ø12 16:Ø16 20:Ø20 25:Ø25 32:Ø32 40:Ø40 50:Ø50 63:Ø63		Blank:Female thread H:Male thread	Blank:W/O magnet M:W/I magnet	Blank:W/O sensor SS:Square type  AL-11 SR:Round type  AL-07 SU:Square type  AL-16	D:NPN E:PNP	1 pc 2 pcs

1. The body length of JQ-M cylinder (Magnetic type) is 10mm longer than JQ cylinder (Non-Magnetic type).
2. Stainless mounting boits is sqggested for the installation of JQ-M cylinder (Magnetic type).

*Sensor please refer to P3-191~P3-193

Stroke table

Boze size	Acting	Stroke table (mm)	Mzx.Stroke (mm)
Ø12 ~ Ø16	Double acting (W/O magnet)	5,10,15,20,25,30,35,40,45,50,55,60	60
	Double acting (W/I magnet)	5,10,15,20,25,30,35,40,45,50	50
Ø20 ~ Ø40	Double acting (W/O magnet)	5,10,15,20,25,30,35,40,45,50,55,60,65,70,75,80,85,90,95,100,110	110
	Double acting (W/I magnet)	5,10,15,20,25,30,35,40,45,50,55,60,65,70,75,80,85,90,95,100	100
Ø50 ~ Ø63	Double acting (W/O magnet)	5,10,15,20,25,30,35,40,45,50,55,60,65,70,75,80,85,90,95,100,110,120	120
	Double acting (W/I magnet)	5,10,15,20,25,30,35,40,45,50,55,60,65,70,75,80,85,90,95,100,110	110

※ Please contact out sales for non-standard stroke.

Specifications

Bore size	Ø12	Ø16	Ø20	Ø25	Ø32	Ø40	Ø50	Ø63
Port size	M5xP0.8				1/8"		1/4"	
Fluid	Compressed air							
Acting	Double acting							
Operating pressure range	1.0 ~ 9 kgf/cm²							
Max operating pressure	9.5 kgf/cm²							
Barrel material	Aluminum alloy							
Magnet	Option							
Ambient temperature	Cushion plate							
Piston speed	-5°C ~ 60°C							
Double acting mm/Sec.	50 ~ 700mm/Sec.							
Single acting mm/Sec.	50 ~ 500							
Non-rotating accuracy	±0.2°			±0.1°				

Dimensions

JQM Standard double acting (Ø12 ~Ø25)

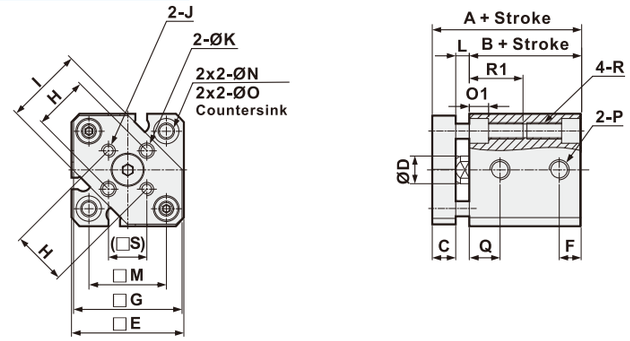

JQM Standard double acting (Ø32 ~Ø63)

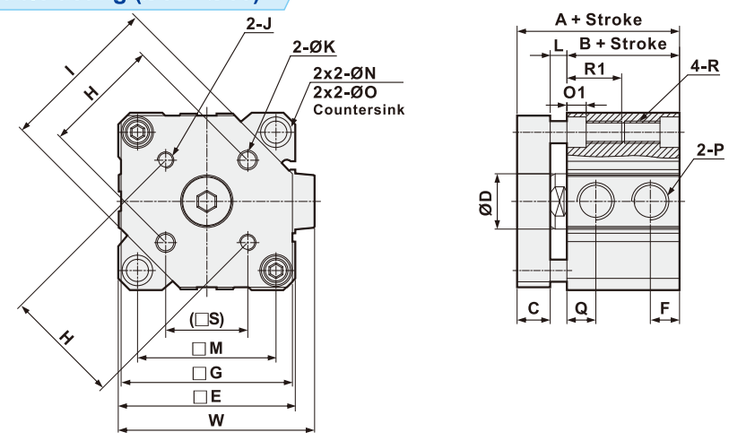

(Unit: mm)

Bore size	Stroke	Without magnet A	Without magnet B	Without magnet F	Without magnet P	Without magnet Q	W/I magnet A	W/I magnet B	W/I magnet F	W/I magnet P	W/I magnet Q	C	D	E
Ø12	5~30	26.5	17	5	M5xP0.8	7.5	36.5	27	5	M5xP0.8	7.5	6	6	25
Ø16	5~30	28	18.5	5.5	M5xP0.8	8	38	28.5	5.5	M5xP0.8	8	6	8	29
Ø20	5~50	32	19.5	5.2	M5xP0.8	9	42	29.5	5.2	M5xP0.8	9	8	10	36
Ø25	5~50	35.5	22.5	5.5	M5xP0.8	11	45.5	32.5	5.5	M5xP0.8	11	8	12	40
Ø32	5 10~50 75~100	40	23	7.5	Rc1/8	10.5	50	33	7.5	Rc1/8	10.5	10	16	45
Ø40	5~50 75~100	46.5 56.5	29.5 39.5	8	Rc1/8	11	56.5	39.5	8	Rc1/8	11	10	16	52
Ø50	5~50 75~100	50.7	30.7	10.5	Rc1/4	10.5	60.7	40.7	10.5	Rc1/4	10.5	12	20	64
Ø63	10~50 75~100	56 66	36 46	10.5	Rc1/4	15	66	46	10.5	Rc1/4	15	12	20	77

Bore size	G	H	I	J	K	L	M	N	O	R	R1	S	W
Ø12	24	10±0.1	14.9	M3xP0.5	Ø3 $^{+0.2}_{0}$	3.5	15.5	3.5	Ø6.5	M4xP0.7	7	7.1	-
Ø16	28	14±0.1	20	M3xP0.5	Ø3 $^{+0.2}_{0}$	3.5	20	3.5	Ø6.5	M4xP0.7	7	9.9	-
Ø20	34	17±0.1	26	M4xP0.7	Ø4 $^{+0.2}_{0}$	4.5	25.5	5.15	Ø9	M6xP1.0	17	12	-
Ø25	38	22±0.1	30	M5xP0.8	Ø5 $^{+0.2}_{0}$	5	28	5.15	Ø9	M6xP1.0	17	15.6	-
Ø32	43	28±0.2	38	M5xP0.8	Ø5 $^{+0.2}_{0}$	7	34	5.15	Ø9	M6xP1.0	17	19.8	49.5
Ø40	50	33±0.2	46	M5xP0.8	Ø5 $^{+0.2}_{0}$	7	40	5.15	Ø9	M6xP1.0	17	23.3	57
Ø50	62	42±0.2	58	M6xP1.0	Ø6 $^{+0.2}_{0}$	8	50	6.8	Ø11	M8xP1.25	22	29.7	71
Ø63	74	50±0.2	69	M6xP1.0	Ø6 $^{+0.2}_{0}$	8	60	8.6	Ø14	M10xP1.5	28.5	35.4	84

Three Rod Cylinder

Features

1. Hard anodized aluminum body provides corrosion and wear resistance.
2. Simplified design.
3. Compact size and space saving.
4. Non-rotated.
5. Low deviation.
6. Built-in magnet.

How to order

TRC	M	12	B50	SR	D	1
Type	**Guide rod**	**Bore size**	**Stroke**	**Sensor**	**Type**	**Number of sensor**
Three rod cylinder	**M** :Bush bearing **L** :Linear bearing	**12** :Ø12 **16** :Ø16 **20** :Ø20 **25** :Ø25 **32** :Ø32 **40** :Ø40 **50** :Ø50 **63** :Ø63		**Black** :W/O sensor **SR** :Round type  AL-07	**Blank** :Reed switch **D** :NPN **E** :PNP	1 pc 2 pcs

*Rod: M-Carbon steel(Bush bearing)
L-Bearing steel(Linear bearing)

*Sensor please refer to P3-191

Specifications

Bore size	Ø12	Ø16	Ø20	Ø25	Ø32	Ø40	Ø50	Ø63
Port size	M5xP0.8		1/8"			1/4"		
Fluid	Compressed air							
Acting	Double acting							
Operating pressure range	1.5 ~ 9.5 kgf/cm²							
Max operating pressure	10 kgf/cm²							
Lubrication	Not required							
Barrel material	Aluminum alloy							
Magnet	Built-in							
Ambient temperature	0°C ~ 60°C							
Piston speed mm/Sec	100 ~ 500							

Dimensions

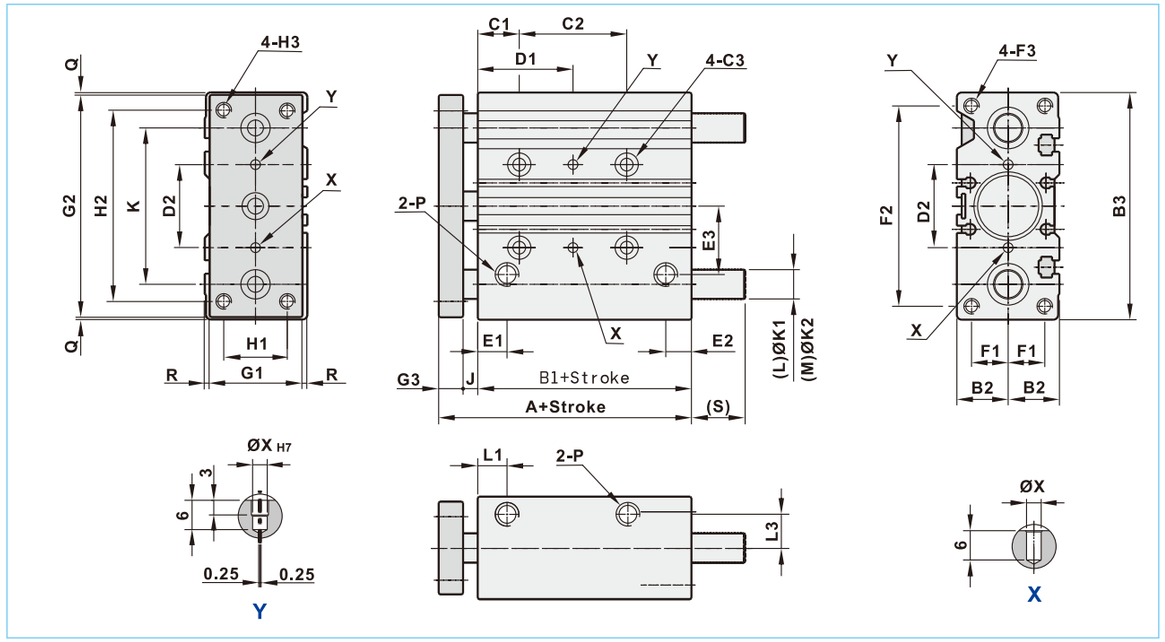

(Unit: mm)

Bore size	A	B1	B2	B3	C1	C2 Over 30ST	C2 Over 31ST	C3	D1 Over 30ST	D1 Over 31ST
Ø12	42	29	13	58	5	20	40	M4 Countersink, Rear M5x0.8Px10dp	15	25
Ø16	46	33	15	64	5	24	44	M4 Countersink, Rear M5x0.8Px10dp	17	27
Ø20	53	37	18	83	17	24	44	M5 Countersink, Rear M6x1.0Px12dp	29	39
Ø25	53.5	37.5	21	93	17	24	44	M5 Countersink, Rear M6x1.0Px12dp	29	39
Ø32	59.5	37.5	24	112	21	24	48	M6 Countersink, Rear M8x1.25Px16dp	33	45
Ø40	66	44	27	120	22	24	48	M6 Countersink, Rear M8x1.25Px16dp	34	46
Ø50	72	44	32	148	24	24	48	M8 Countersink, Rear M10x1.5Px20dp	36	48
Ø63	77	49	39	162	24	28	52	M8 Countersink, Rear M10x1.5Px20dp	38	50

Bore size	D2	E1	E2	E3	F1	F2	F3	G1	G2	G3	H1	H2	H3
Ø12	23	10	8	18	9	50	M4x0.7Px10dp	22	56	7	14	48	M4x0.7P
Ø16	24	10.5	8.5	17	11	56	M5x0.8Px12dp	25	62	7	16	54	M5x0.8P
Ø20	28	11.5	9	25	12	72	M5x0.8Px13dp	30	81	8	18	70	M5x0.8P
Ø25	34	11.5	10	28	15	82	M6x1.0Px15dp	38	91	9	26	78	M6x1P
Ø32	42	12	11	32	17	98	M8x1.25Px20dp	44	110	10	30	96	M8x1.25P
Ø40	50	15	11	39.5	20	106	M8x1.25Px20dp	44	118	10	30	104	M8x1.25P
Ø50	66	15	12	47	23	130	M10x1.5Px22dp	60	146	12	40	130	M10x1.5P
Ø63	80	15.5	13.5	58	29	142	M10x1.5Px22dp	70	158	12	50	130	M10x1.5P

Bore size	J	K	KI	K2	L1	L3	P	Q	R	X	S(Bush bearing M) Over 30ST	S(Bush bearing M) Over 31ST	S(Linear bearing L) Over 30ST	S(Linear bearing L) Over 31ST
Ø12	6	41	6	8	10	8.5	M5	1	2	3	0	13	0	13
Ø16	6	46	8	10	10.5	10.5	M5	1	2.5	3	0	19	0	19
Ø20	8	54	10	12	11.5	11.5	G 1/8	1	3	3	0	27	0	27
Ø25	7	64	12	16	11.5	14	G 1/8	1	2	4	0	28.5	0	28.5
Ø32	12	78	16	20	12	16.5	G 1/8	1	2	4	18.5	42.5	5.5	42.5
Ø40	12	86	16	20	15	18	G 1/8	1	5	4	9	50	13.5	50
Ø50	16	110	20	25	15	21.5	G 1/4	1	2	5	16.5	55.5	19.5	55.5
Ø63	16	124	20	25	15.5	28	G 1/4	2	4	5	11.5	50.5	14.5	50.5

Material of parts

TRCL
Linear bearing type

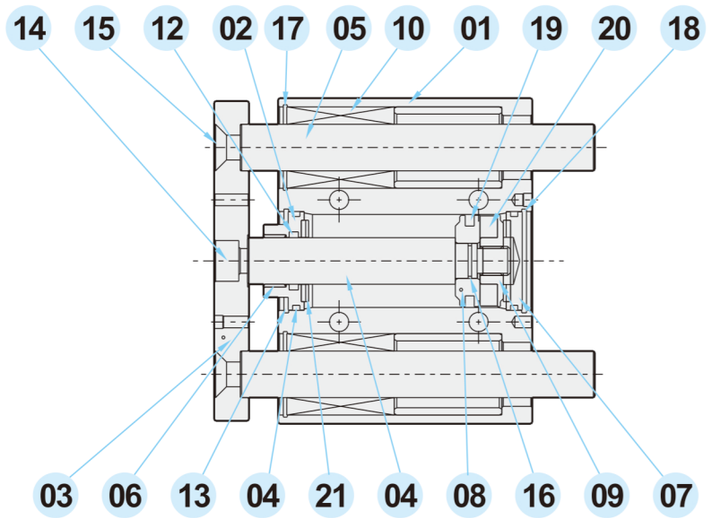

TRCM
Bush bearing type

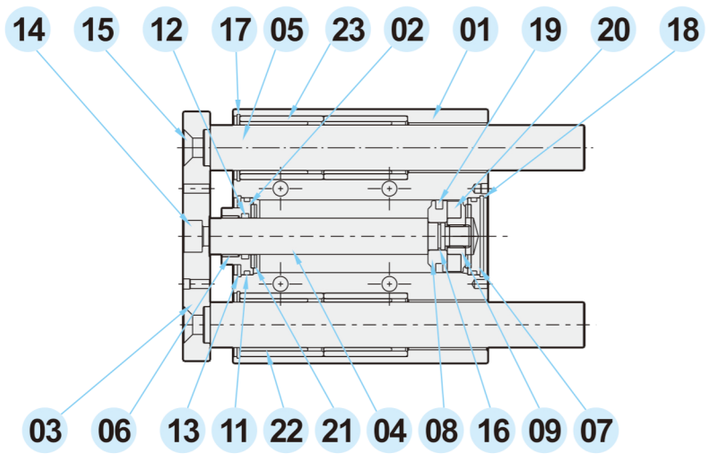

No.	Description	Material	Qty.	No.	Description	Material	Qty.
1	Barrel	Aluminum alloy	1	13	Snap ring	Spring steel	1
2	Front cover	Aluminum alloy	1	14	Fixing screw	Alloy steel	1
3	Front plate	Ferroalloy	1	15	Fixing screw	Alloy steel	2
4	Piston rod	Carbon steel	1	16	Piston O-ring	NBR	1
5	Guide rod	Carbon steel/Bearing steel	2	17	Snap ring	Spring steel	2
6	Bush bearing	Alloy steel	1	18	Snap ring	Spring steel	1
7	Rear cover	Aluminum alloy	1	19	Piston packing	NBR	1
8	Piston	Aluminum alloy	1	20	Magnet	Ferrite mangnet	1
9	Magnet holder	Aluminum alloy	1	21	Cushion plate	NBR	2
10	Linear bearing	Bearing steel	2(4)	22	Bush bearing	Alloy steel	2(4)
11	O-ring	NBR	2	23	Bush bearing support	Aluminum alloy	2(4)
12	Rod packing	NBR	1				

Stroke table

Model	Standard stroke (mm)											
	10	20	25	30	40	50	75	100	125	150	175	200
TRCL12 / TRCM12	●	●	●	●	●	●	●	●				
TRCL16 / TRCM16	●	●	●	●	●	●	●	●				
TRCL20 / TRCM20	●	●	●	●	●	●	●	●				
TRCL25 / TRCM25	●	●	●	●	●	●	●	●				
TRCL32 / TRCM32			●			●	●	●	●	●	●	●
TRCL40 / TRCM40			●			●	●	●	●	●	●	●
TRCL50/ TRCM50			●			●	●	●	●	●	●	●
TRCL63 / TRCM63			●			●	●	●	●	●	●	●

Mounting example

Bottom vertical mounting	Bottom face mounting
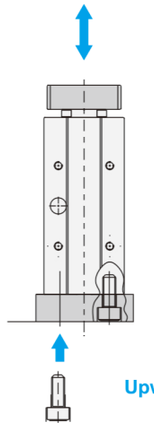	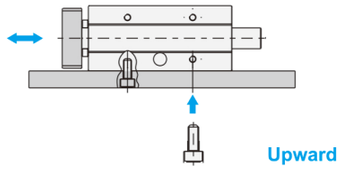
	Top face mounting
	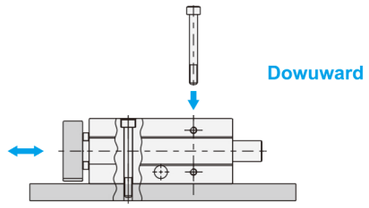

Sensor mounting example

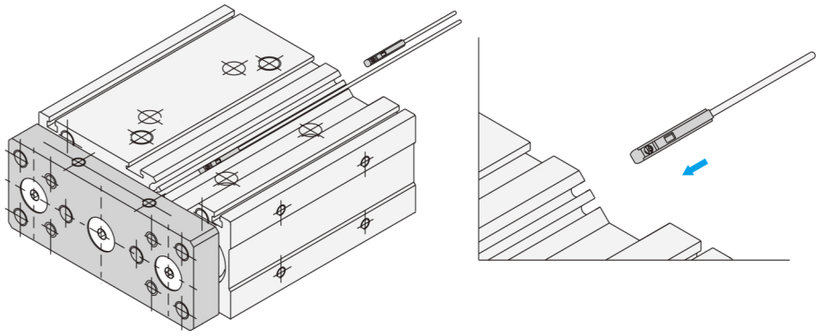

Guide Cylinder

Features

1. Integrate the guide rod with ISO15552 (Ø32~Ø100) and ISO6432 (Ø20, Ø25) cylinders for action.
2. Adjustable cushion for ISO6432 (Ø20, Ø25) cylinder is optional for more stable movement.
3. Cylinder body connected with guide rod by floating joint, without friction in operation.
4. Non rotating guide rod with high accuracy.
5. The linear bearing is applicable to high speed acting and light loads.
6. The bush bearing is applicable to low speed acting and heavy loads.
7. Sensor switch and shock absorber are optional accessories.

How to order

GC	M	20	B50	F	SF	D	1
Guide cylinder	Guide rod	Bore size	Stroke	Shock absorber	Sensor	Type	Number of sensor
	M:Bush bearing L :Linear bearing	20:Ø20 25:Ø25 32:Ø32 40:Ø40 50:Ø50 63:Ø63 80:Ø80 100:Ø100		Blank:W/O shock absorber F:Assembly in front B:Assembly in rear FB:Assembly in front & rear R:End plate (for Ø20, Ø25)	Blank:W/O sensor SF:LED in top (Ø20, Ø25) 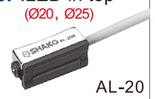 AL-20 ST:LED on top (Ø20, Ø25)  AL-21 SM:Round type (Ø32 ~ Ø100)  AL-76	Blank:Reed switch D:NPN E:PNP	1 pc 2 pcs

*Please refer to page 6-21 "SHOCK ABSORBER" for specifications of shock absorber.
*Body length will be increased with 25mm for assembling cushion in rear for Ø32~Ø63.
*Body length will be increased with 50mm for assembling cushion in rear for Ø80~Ø100.

*Sensor please refer to P3-189, P3-190, P3-195

Specifications

Bore size	Ø20	Ø25	Ø32	Ø40	Ø50	Ø63	Ø80	Ø100
Port size	1/8"			1/4"		3/8"		1/2"
Fluid	Compressed air							
Acting	Double acting							
Operating pressure range	2 ~ 9 kgf/cm²							
Max operating pressure	10.5 kgf/cm²							
Lubrication	Not required							
Barrel material	SUS 304		Aluminum alloy					
Magnet	Built-in							
Ambient temperature	0°C ~ 60°C							
Piston speed mm/Sec	100 ~ 500mm/Sec.							

Dimensions

Ø20, Ø25

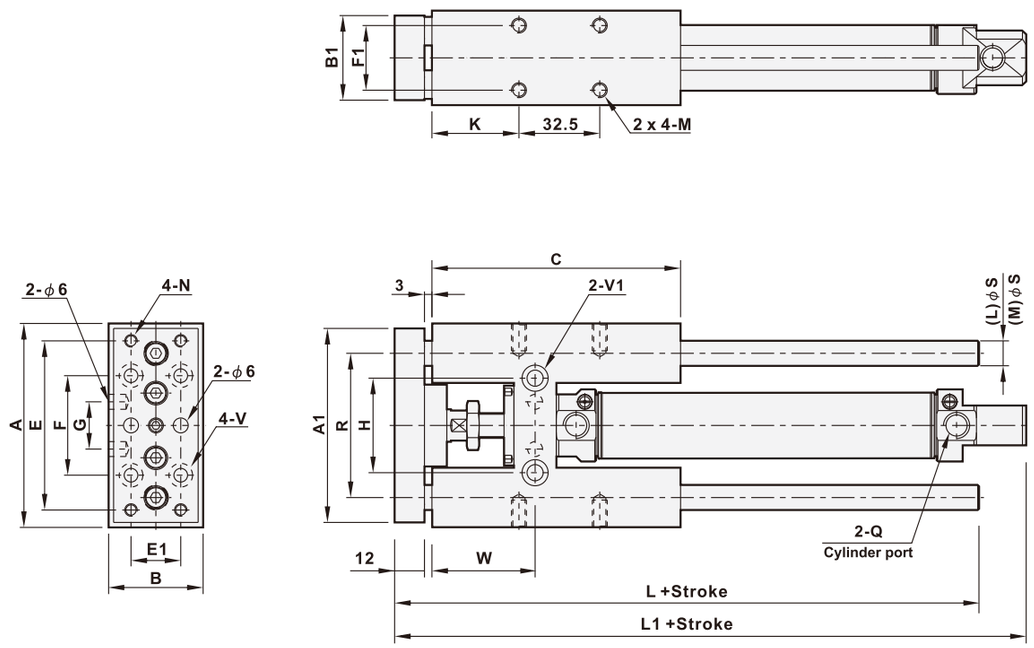

R: End plate

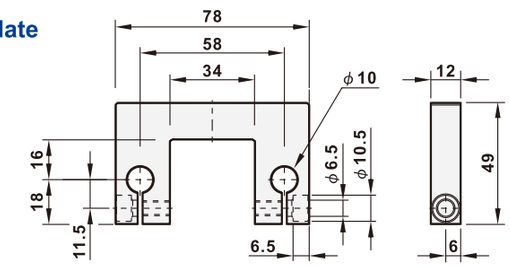

(Unit: mm)

Bore size	A	A1	B	B1	C	E	E1	F	F1	G	H	K	L	L1
Ø20	82	78	38	34	100	68	20	40	26	19	38	35	135	150
Ø25	82	78	38	34	100	68	20	40	26	19	38	35	135	155

Bore size	M	N	R	S	V	V1	W
Ø20	M6, Depth 11	M5	58	10	Ø5.5, Ø9.5 Depth 5.4	Ø6.5, Ø10.5 Depth 6.5	41.5
Ø25	M6, Depth 11	M5	58	10	Ø5.5, Ø9.5 Depth 5.4	Ø6.5, Ø10.5 Depth 6.5	41.5

Dimensions

ϕ32～ϕ100

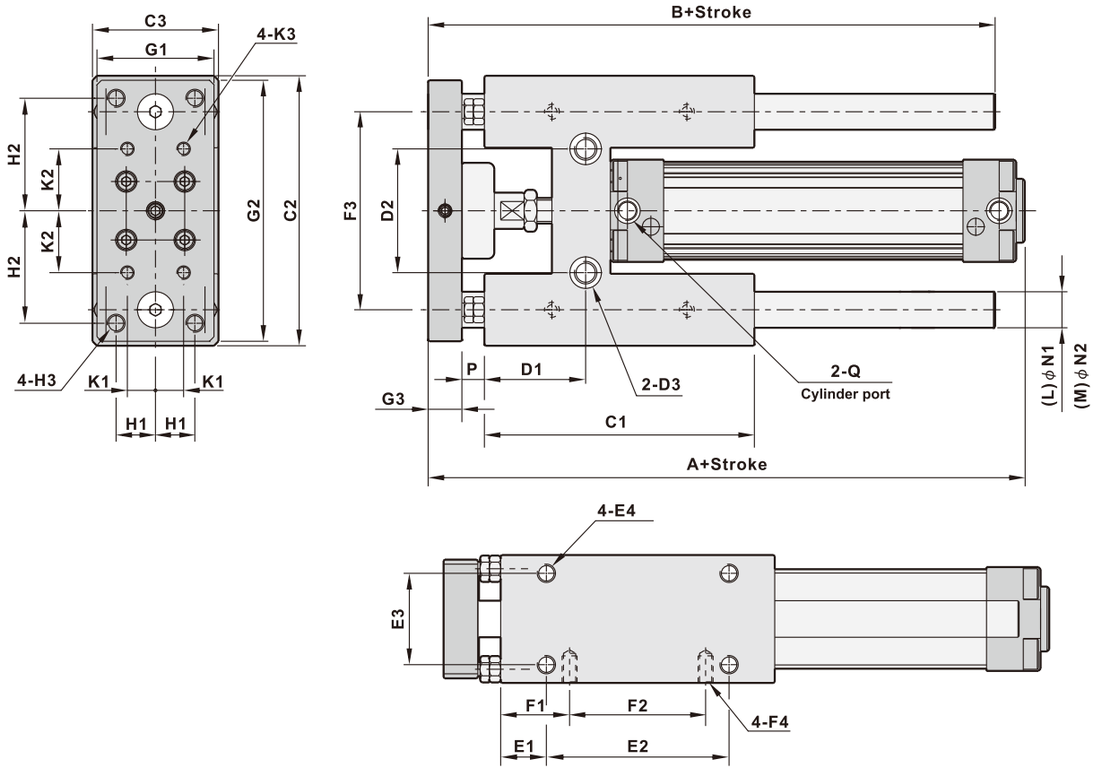

(Unit: mm)

Bore size	A	B	C1	C2	C3	D1	D2	D3	E1	E2	E3	E4	F1	F2	F3
ϕ32	179	152	120	120	56	45	55	ϕ8.5-ϕ14x8.5Depth	20	80	40	M6xP1.0x15Depth	30	60	88
ϕ40	190	152	120	120	56	45	55	ϕ8.5-ϕ14x6Depth	20	80	40	M6xP1.0x15Depth	30	60	88
ϕ50	220	200	160	160	78	65	80	ϕ10.5-ϕ17.5x10.5Depth	30	100	50	M8xP1.25x24Depth	40	80	120
ϕ63	236	200	160	160	78	65	80	ϕ10.5-ϕ17.5x7Depth	30	100	50	M8xP1.25x24Depth	40	80	120
ϕ80	280	270	220	220	115	90	120	ϕ12.5-ϕ20x13Depth	40	140	80	M10xP1.5x20Depth	60	100	170
ϕ100	290	270	220	220	115	90	120	ϕ12.5-ϕ20x12Depth	40	140	80	M10xP1.5x20Depth	60	100	170

Bore size	F4	G1	G2	G3	H1	H2	H3	K1	K2	K3	N1	N2	P	Q
ϕ32	M6xP1.0x10Depth	52	116	15	17.5	50	M8xP1.25	12.5	27.5	M6xP1.0	16	20	10	G 1/8
ϕ40	M6xP1.0x10Depth	52	116	15	17.5	50	M8xP1.25	12.5	27.5	M6xP1.0	16	20	10	G 1/4
ϕ50	M8xP1.25x18.5Depth	74	156	20	25	65	M10xP1.5	20	40	M8xP1.25	20	25	10	G 1/4
ϕ63	M8xP1.25x18.5Depth	74	156	20	25	65	M10xP1.5	20	40	M8xP1.25	20	25	10	G 3/8
ϕ80	M10xP1.5x20Depth	110	216	25	40	90	M12xP1.75	30	55	M10xP1.5	25	30	10	G 3/8
ϕ100	M10xP1.5x20Depth	110	216	25	40	90	M12xP1.75	30	55	M10xP1.5	25	30	10	G 1/2

Dimensions

FB: Assembly in front & rear

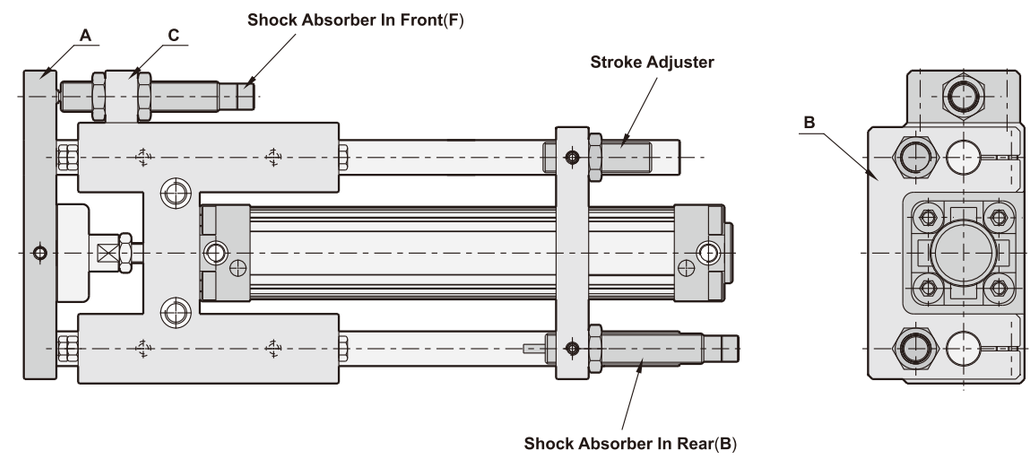

A: Front plate

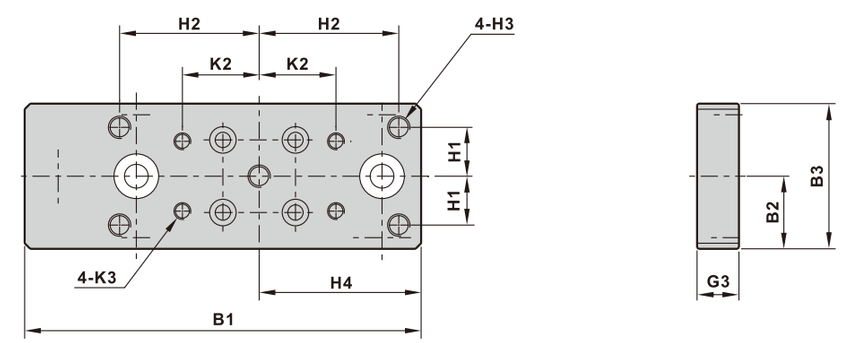

(Unit: mm)

Bore size	B1	B2	B3	G3	H1	H2	H3	H4	K2	K3
ϕ32	142	26	52	15	17.5	50	M8xP1.25	58	27.5	M6xP1.0
ϕ40	142	26	52	15	17.5	50	M8xP1.25	58	27.5	M6xP1.0
ϕ50	190	37	74	20	25	65	M10xP1.5	78	40	M8xP1.25
ϕ63	190	37	74	20	25	65	M10xP1.5	78	40	M8xP1.25
ϕ80	258	55	110	25	40	90	M12xP1.75	108	55	M10xP1.5
ϕ100	258	55	110	25	40	90	M12xP1.75	108	55	M10xP1.5

Dimensions

B : End plate

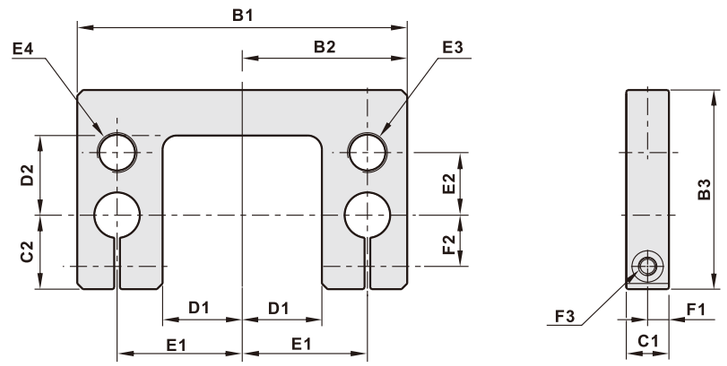

(Unit: mm)

Bore size	I1	I2	I3	J1	J2	L1	L2	M1	M2	M3	M4	O1	O2	O3
ϕ32	116	58	70	15	26	32	28	44	22	M14xP1.5	M14xP1.5	7.5	18	ϕ6.5-ϕ9.5x6.5 Depth
ϕ40	116	58	70	15	26	32	28	44	22	M14xP1.5	M14xP1.5	7.5	18	ϕ6.5-ϕ9.5x6.5 Depth
ϕ50	158	78	97	20	37	43	39	60	32	M14xP1.5	M20xP1.5	10	25	ϕ8.5-ϕ14x8.5 Depth
ϕ63	158	78	97	20	37	43	39	60	32	M14xP1.5	M20xP1.5	10	25	ϕ8.5-ϕ14x8.5 Depth
ϕ80	216	108	140	25	55	57.5	57.5	85	48	M14xP1.5	M25xP1.5	12.5	40	ϕ10.5-ϕ17x11 Depth
ϕ100	216	108	140	25	55	57.5	57.5	85	48	M14xP1.5	M25xP1.5	12.5	40	ϕ10.5-ϕ17x11 Depth

C : Mounting block

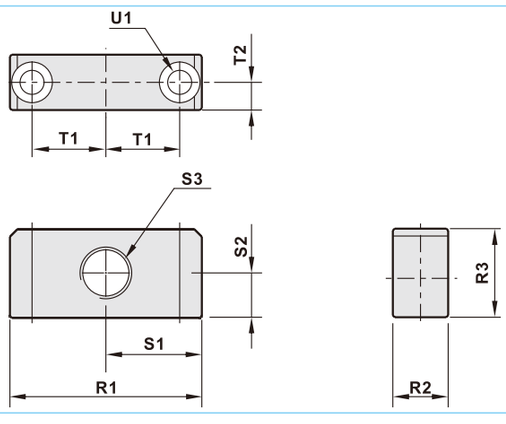

(Unit: mm)

Bore size	R1	R2	R3	S1	S2	S3	T1	T2	U1	Shock absorber code
ϕ32	52	15	24	26	12	M14xP1.5	20	7.5	ϕ6.5-ϕ9.5x6.5 Depth	DA1415
ϕ40	52	15	24	26	12	M14xP1.5	20	7.5	ϕ6.5-ϕ9.5x6.5 Depth	DA1415
ϕ50	74	20	32	37	16	M20xP1.5	25	10	ϕ8.5-ϕ14x8.5 Depth	DA2020
ϕ63	74	20	32	37	16	M20xP1.5	25	10	ϕ8.5-ϕ14x8.5 Depth	DA2020
ϕ80	110	25	40	55	20	M25xP1.5	40	12.5	ϕ10.5-ϕ17x11 Depth	DA2525
ϕ100	110	25	40	55	20	M25xP1.5	40	12.5	ϕ10.5-ϕ17x11 Depth	DA2525

Material of parts

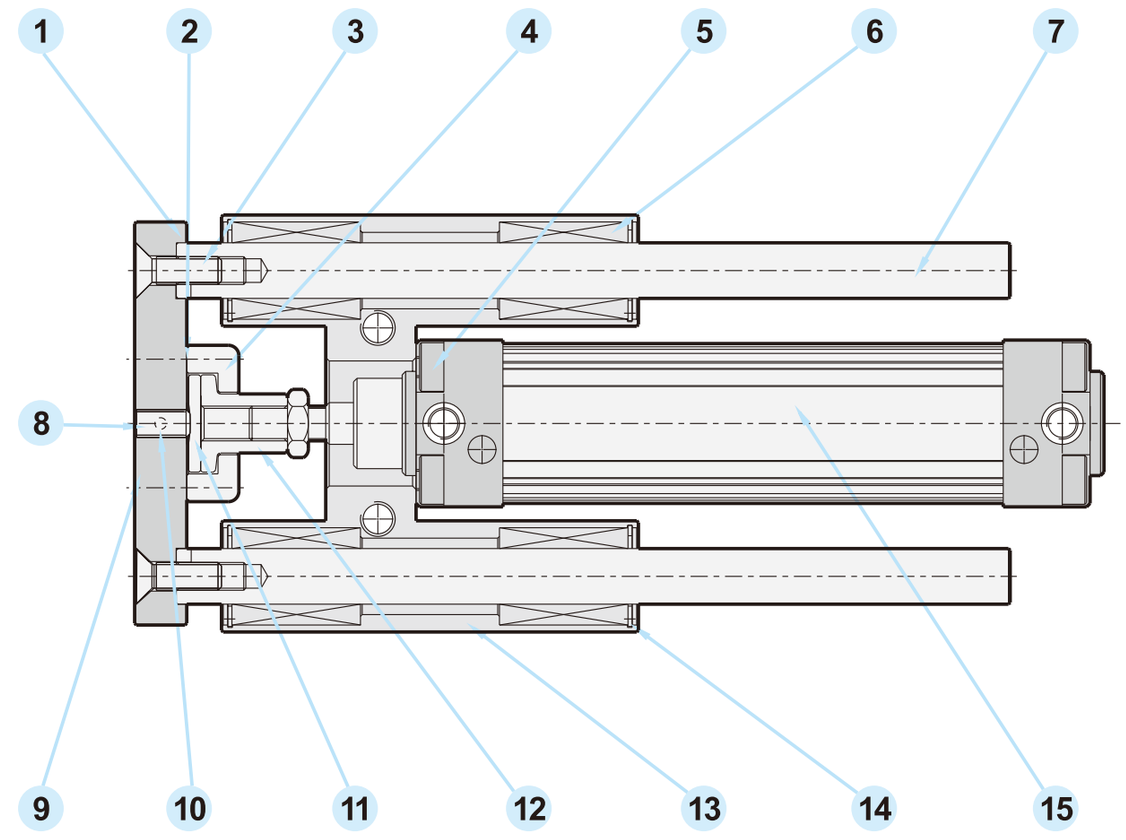

No.	Description	Material	Qty.
1	Stopper	Carbon steel	4
2	Fixing screw	Carbon steel	4
3	Fixing screw	Carbon steel	2
4	Mounting plate	Carbon steel	1
5	Fixing screw	Carbon steel	4
6	Bushing	Bush (L:Linear bearing)	4
7	Guide rod	Carbon steel (L:Bearing steel)	2

No.	Description	Material	Qty.
8	Socket set screws	Carbon steel	1
9	Plate	Aluminum alloy	1
10	Socket set screws	Carbon steel	1
11	Washer	Carbon steel	1
12	Adaptor	Carbon steel	1
13	Guide body	Aluminum alloy	1
14	Snap ring	Carbon steel	4
15	ISO6431 standard cylinder	Aluminum alloy	1

Theoretical force

Bore size	Rod diameter	Acting	Piston area cm²	Operating pressure kgf/cm²					
				2	3	4	5	6	7
ϕ 20	ϕ 8	Push	3.14	6.28	9.42	12.56	15.7	18.84	21.98
		Pull	2.64	5.28	7.92	10.56	13.2	15.84	18.48
ϕ 25	ϕ 10	Push	4.90	9.8	14.7	14.7	24.5	29.4	34.3
		Pull	4.12	8.24	12.36	12.36	20.6	24.72	28.84
ϕ 32	ϕ 12	Push	8.04	16.08	24.12	32.16	40.2	48.24	56.28
		Pull	6.91	13.82	20.73	27.64	34.56	41.46	48.37
ϕ 40	ϕ 16	Push	12.57	25.14	37.71	50.28	62.85	75.42	87.99
		Pull	10.56	21.12	31.68	42.24	52.8	63.36	73.92
ϕ 50	ϕ 20	Push	19.63	39.26	58.89	78.52	98.15	117.78	137.41
		Pull	16.49	32.98	49.47	65.96	82.45	98.94	115.43
ϕ 63	ϕ 20	Push	31.17	62.34	93.51	124.68	155.85	187.02	218.19
		Pull	28.03	56.06	84.09	112.12	140.15	168.18	196.21
ϕ 80	ϕ 25	Push	50.27	100.54	150.81	201.08	251.35	301.62	351.89
		Pull	45.36	90.72	136.08	181.44	226.8	272.16	317.52
ϕ 100	ϕ 25	Push	78.54	157.08	235.62	314.16	392.7	441.78	549.78
		Pull	73.63	147.26	220.89	294.52	368.15	417.24	515.41

Stroke table

Bore size	Acting	Standard stroke(mm)	Max. Standard stroke(mm)
ϕ 20 ~ ϕ 25	Double acting	5 ~ 500	900
ϕ 32 ~ ϕ 100		25 ~ 1000	1800

Note: Please contact our sales for non-standard stroke.

Mounting example

Side mounting

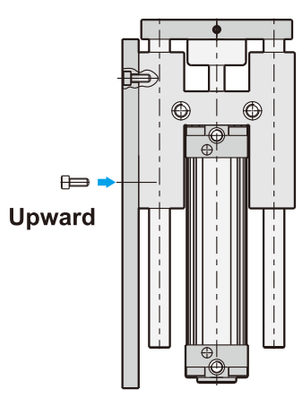

Top face mounting

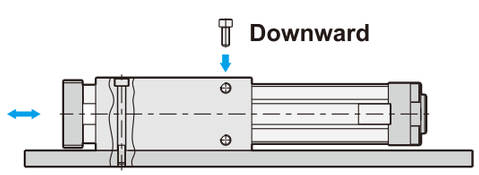

Bottom face mounting

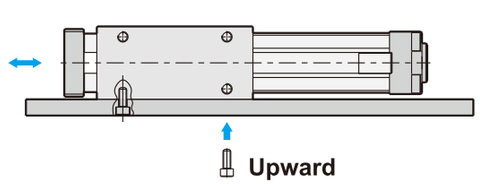

Memo...

Mini Gripper

Features

1. Identical to SMC mounting hole
2. Precision and no vibration.
3. Endurable and strong mechanism.
4. SUS440C gripper provides a long life of product.
5. Aluminum alloy body with hard anodizing for wear and corrosion resistance.

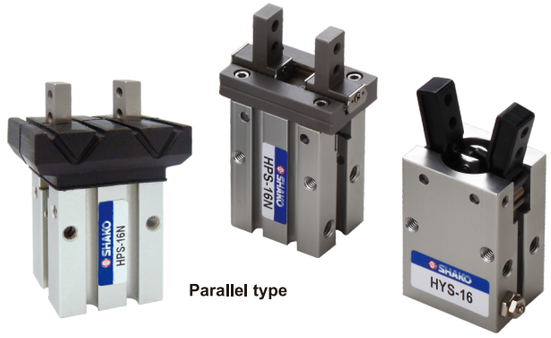

Parallel type

Fulcrum type

How to order

HPS	16	N	SR	D	1
Mini chuck	Bore size	Type of gripper	Sensor	Type	Number of sensor
HPS:Parallel type (Linear mechanism) **HYS**:Fulcrum type	**10**:Ø10 **16**:Ø16 **20**:Ø20 **25**:Ø25	**W**:Wide **N** :Narrow	**Blank**:W/O sensor **SQ** :Square type AL-30 (For HPS only) **SR** :Round type AL-07	**Blank**:Reed switch **D**:NPN **E**:PNP	1 pc 2 pcs

*Sensor please refer to P3-191, P3-194

Specifications

Bore size	Ø10	Ø16	Ø20	Ø25
Port size	M3	M5		
Gripping gap distance (Wide type)	Full open:15.2mm Full closed:11.2mm	Full open:22mm Full closed:14mm	Full open:26mm Full closed:16mm	Full open:33.3mm Full closed:19.3mm
Gripping gap distance (Narrow type)	Full open:9.7mm Full closed:5.7mm	Full open:15.2mm Full closed:7mm	Full open:17.2mm Full closed:7.7mm	Full open:22.8mm Full closed:8.8mm
Internal gripping force(For HPS)	16.5N	44N	65.5N	102N
External gripping force(For HPS)	10.5N	33N	42N	63.5N
Fluid	Compressed air			
Acting	Double acting			
Operating pressure range	Fulcrum type：1.0~6.1 kgf/cm², Parallel type：1.0~7 kgf/cm²			
Max. operating pressure	7 kgf/cm²			
Lubrication	Not required or few			
Body material	Aluminum alloy (6061T6)			
Gripper material	SUS(Parallel type), S45C(Fulcrum type)			
Magnet	Built-in			
Ambient temperature	0°C ~ 60°C			
Operating frequency	HPS: 160 c.p.m. HYS: 180 c.p.m			
Operating angle (For HYS)	-10° ~ 30°			

Dimensions

HPS-10~25

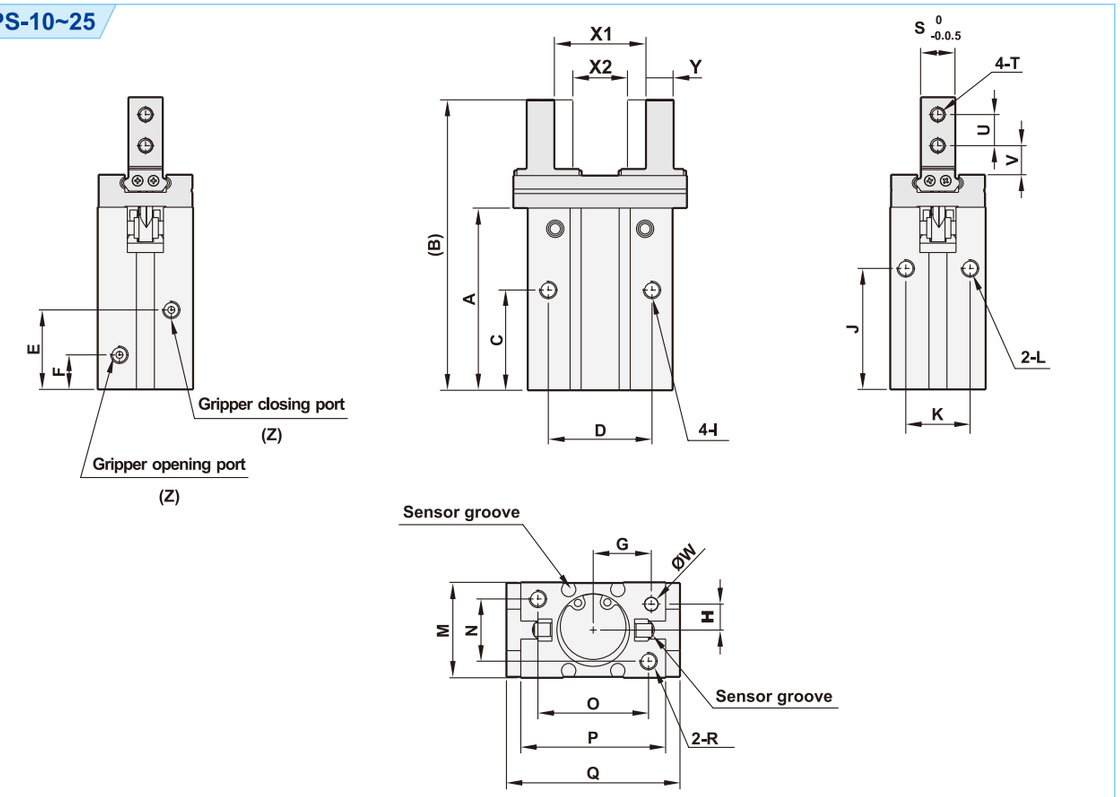

(Unit: mm)

Model	A	B	C	D	E	F	G	H	I	J	K	L	M
HPS-10W	37.8	57	23	16	19	9	7.6	5.2	M3xP0.5xL6.0	27	11.4	M3xP0.5xL6.0	16.4
HPS-10N	37.8	57	23	16	19	9	7.6	5.2	M3xP0.5xL6.0	27	11.4	M3xP0.5xL6.0	16.4
HPS-16W	42.4	67	24.5	24	19	7.5	11	6.5	M4xP0.7xL8.0	30	16	M4xP0.7xL4.5	23.6
HPS-16N	42.4	67	24.5	24	19	7.5	11	6.5	M4xP0.7xL8.0	30	16	M4xP0.7xL4.5	23.6
HPS-20W	52.7	84	29	30	23	10	16.8	7.5	M5xP0.8xL10.0	35	18.6	M5xP0.8xL8.0	27.6
HPS-20N	52.7	84	29	30	23	10	16.8	7.5	M5xP0.8xL10.0	35	18.6	M5xP0.8xL8.0	27.6
HPS-25W	63.6	102.7	30	36	23.5	10.7	21.8	10	M6xP1.0xL12.0	36.5	22	M6xP1.0xL10.0	33.6
HPS-25N	63.6	102.7	30	36	23.5	10.7	21.8	10	M6xP1.0xL12.0	36.5	22	M6xP1.0xL10.0	33.6

Model	N	O	P	Q	R	S	T	U	V	W	X1	X2	Y	Z
HPS-10W	12	19	23	29	M3xP0.5xL6.0	5	M2.5xP0.45	5.7	4.8	2	$15.2^{+2.2}_{0}$	$11.2^{0}_{-0.7}$	$4^{0}_{-0.1}$	M3xP0.5
HPS-10N	12	19	23	29	M3xP0.5xL6.0	5	M2.5xP0.45	5.7	4.8	2	$9.7^{+2.2}_{0}$	$5.7^{0}_{-0.4}$	$4^{0}_{-0.1}$	M3xP0.5
HPS-16W	15	22	30.6	38.1	M4xP0.7xL8.0	8	M3xP0.5	7	6.3	3	$22^{+2.2}_{-0.2}$	$14^{0}_{-0.7}$	$5^{0}_{-0.1}$	M5xP0.8
HPS-16N	15	22	30.6	38.1	M4xP0.7xL8.0	8	M3xP0.5	7	6.3	3	$15.2^{+2.2}_{0}$	$7^{0}_{-0.4}$	$5^{0}_{-0.1}$	M5xP0.8
HPS-20W	18	32	42	50.2	M5xP0.8xL10.0	10	M4xP0.7	9	7.9	4	$26^{+2.2}_{-0.2}$	$16^{0}_{-0.7}$	$8^{0}_{-0.1}$	M5xP0.8
HPS-20N	18	32	42	50.2	M5xP0.8xL10.0	10	M4xP0.7	9	7.9	4	$17.2^{+2.2}_{0}$	$7.7^{0}_{-0.4}$	$8^{0}_{-0.1}$	M5xP0.8
HPS-25W	22	40	52	63	M6xP1.0xL12.0	12	M5xP0.8	12	10.4	4	$33.3^{+2.5}_{-0.2}$	$19.3^{0}_{-0.8}$	$10^{0}_{-0.1}$	M5xP0.8
HPS-25N	22	40	52	63	M6xP1.0xL12.0	12	M5xP0.8	12	10.4	4	$22.8^{+2.5}_{0}$	$8.8^{0}_{-0.4}$	$10^{0}_{-0.1}$	M5xP0.8

Dimensions

HYS-10~25

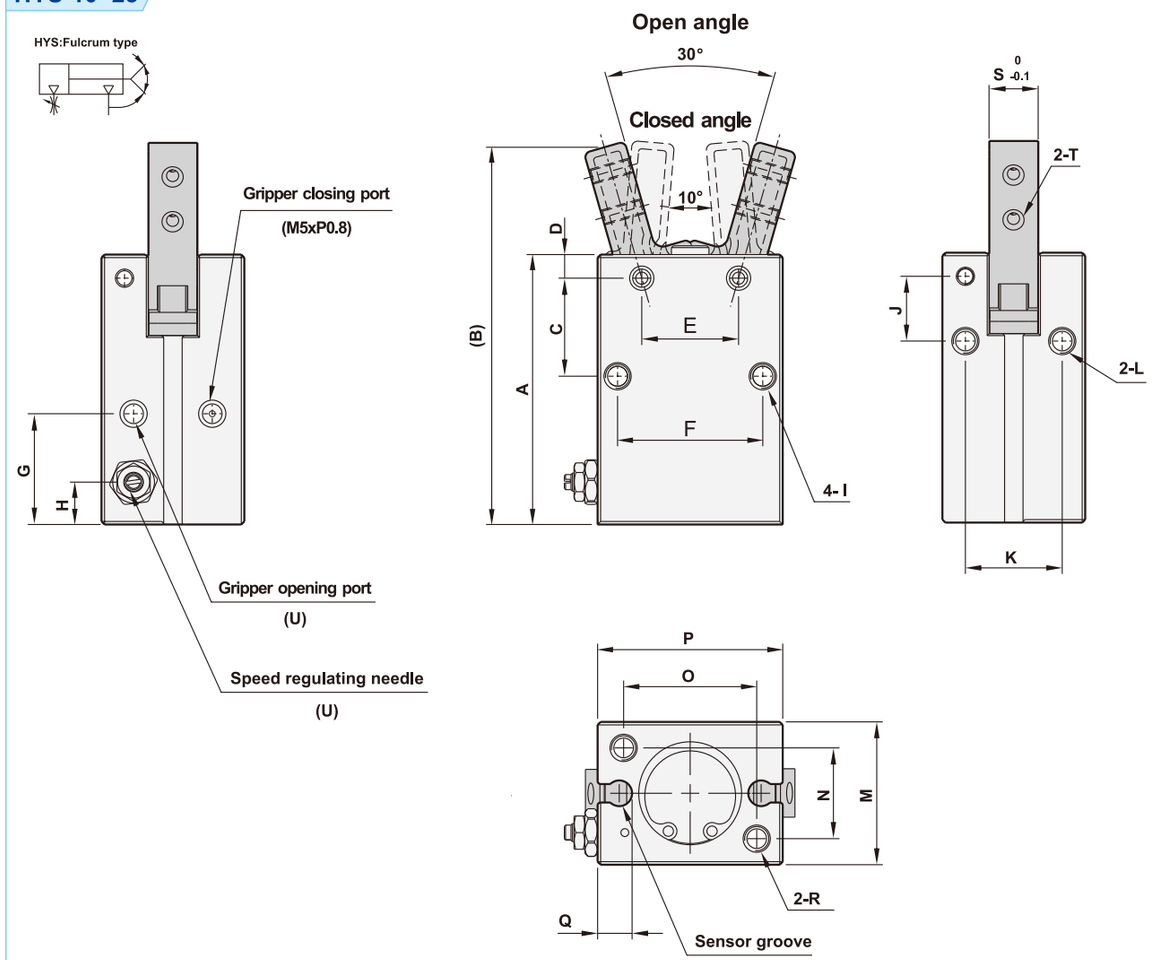

(Unit: mm)

Model	A	B	C	D	E	F	G	H	I	J	K
HYS-10	38.6	52.4	12.8	2.8	10	16	18.8	7.2	M3xP0.5xL6	8.8	11.4
HYS-16	44.6	62.5	16.2	3.9	16	24	18.3	7	M4xP0.7xL8	10.7	16
HYS-20	55.2	77.7	21.7	4.5	20	30	22.2	7.5	M5xP0.8xL10	15.7	18.6
HYS-25	60.4	92	25.8	4.6	25	36	23.5	8.5	M6xP1.0xL10	19.3	22

Model	L	M	N	O	P	Q	R	S	T	U
HYS-10	M3xP0.5xL6	16.4	12	18	23	4.6	M3xP0.5xL6	6.4	M2.5xP0.45through	M3xP0.5
HYS-16	M4xP0.7xL6.5	23.6	15	22	30.6	5.7	M4xP0.7xL8	8	M3xP0.5through	M5xP0.8
HYS-20	M5xP0.8xL8	27.6	18	32	42	8.8	M5xP0.8xL10	10	M4xP0.7through	M5xP0.8
HYS-25	M6xP1.0xL10	33.6	22	40	52	11.5	M6xP1.0xL12	12	M5xP0.8through	M5xP0.8

Gripping force graph

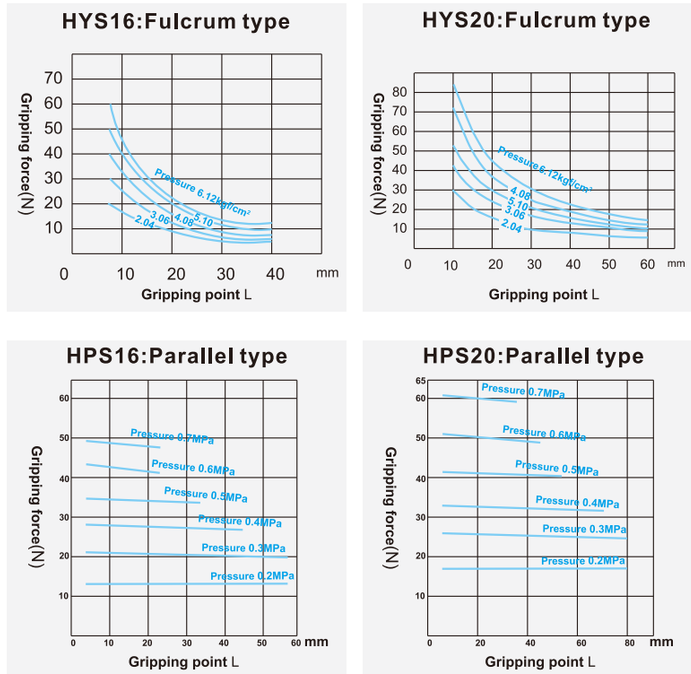

Pressure/Gripping point/Gripping force graph
*Please note that gripping force need 10~20 times greater than the work piece weight.

Effective gripping force calculation

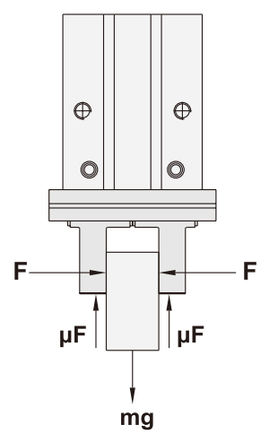

When gripping a work piece as in the left figure , the following definitions are applied:

F: Gripping force (N)
μ: Coefficient of friction between the attachments and the work piece
m: Work piece mass (kg)
g: Gravitational acceleration (=9.8m/s²)
mg: Work piece weight (N)

the conditions under which the work piece will not drop are:

$$\underbrace{2}_{\text{Number of fingers}} \times \mu F > mg$$

and therefore

$$F > \frac{mg}{2 \times \mu}$$

With "a" representing the extra margin, F is determined by the following formula:

$$F > \frac{mg}{2 \times \mu} \times a$$

※Even in cases where the coefficient of friction is greater than μ=0.2, for reasons of safety, a gripping force should be selected at least 10 to 20 times greater than the work piece weight.

※It is necessary to allow a greater margin for high accelerations and strong impacts.

Example:
<The "10 to 20 times or more of the work piece weight">

When μ = 0.2	When μ = 0.1
$F=\frac{mg}{2 \times 0.2} \times 4 = 10 \times mg$	$F=\frac{mg}{2 \times 0.1} \times 4$
10 x work piece weight	20 x work piece weight

Material of parts

HPS: Parallel type

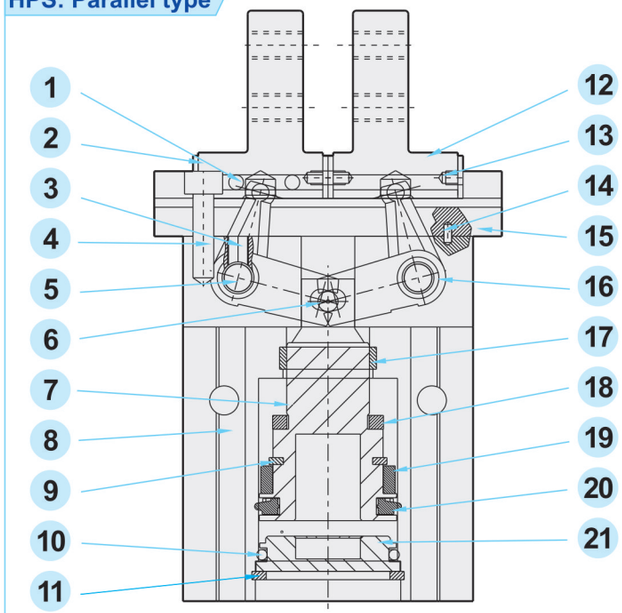

No.	Description	Material	Qty
1	Steel ball	Carbon steel	24
2	Roller stopper	Stainless steel	4
3	Plug	Fe+Ni	2
4	Hex socket head cap screw	Stainless steel	4
5	Lever shaft	Stainless steel	2
6	Center pin	Stainless steel	1
7	Piston	Aluminum alloy	1
8	Body	Aluminum alloy	1
9	Snap ring	Fe+Ni	1
10	O-ring	NBR	1
11	C type snap ring	Stainless steel	1
12	Gripper	Stainless steel	2
13	Screw	Fe+Ni	8
14	Parallel pin	Stainless steel	2
15	Guide	Stainless steel	1
16	Lever	Stainless steel	2
17	U-ring	NBR	1
18	Bumper	PU	1
19	Magnet	Rare earth magnet	1
20	U-piston seal	NBR	1
21	End cover	Aluminum alloy	1

HYS: Fulcrum type

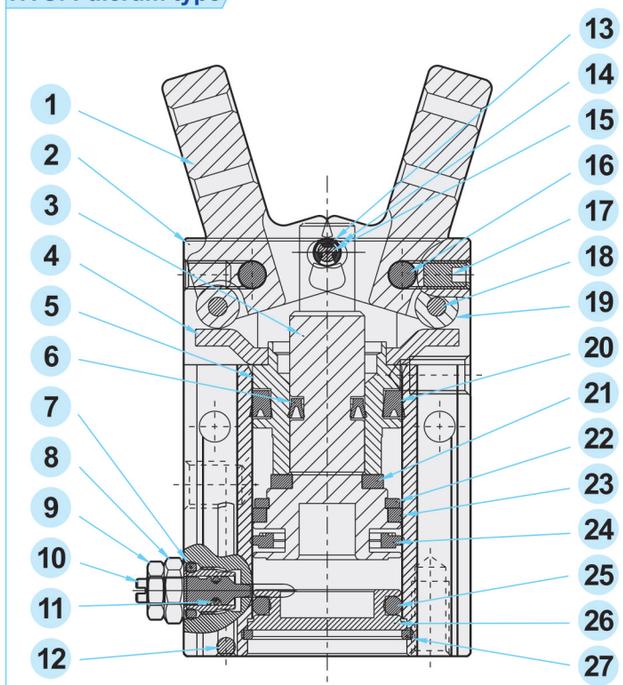

No.	Description	Material	Qty
1	Gripper	Carbon steel	2
2	Body	Aluminum alloy	1
3	Piston	Aluminum alloy	1
4	Plate	Carbon steel	1
5	Sleeve	Aluminum alloy	1
6	U-ring	NBR	1
7	O-ring	NBR	1
8	Bolt	Cu	1
9	Nut	Fe+Ni	1
10	Speed regulating needle	Cu	1
11	O-ring	NBR	1
12	Steel ball	Carbon steel	1
13	Snap ring	Stainless steel	1
14	Center roller	Stainless steel	2
15	Center pin	Stainless steel	1
16	Lever shaft	Stainless steel	2
17	Plug	Fe+Ni	2
18	Roller pin	Stainless steel	2
19	Roller	Stainless steel	2
20	U-ring	NBR	1
21	Bumper	PU	1
22	Snap ring	Fe+Ni	1
23	Magnet	Rare earth magnet	1
24	U-piston ring	NBR	1
25	O-ring	NBR	1
26	End cover	Aluminum alloy	1
27	C type snap ring	Stainless steel	1

Memo..

Mini Gripper

Features

1. The gripper open and close are controlled by pneumatic system.
2. Miniature design, space saving.
3. Sensor installation is available.

Fulcrum type

Parallel type

How to order

HYC	32	SR	D	1
Mini chuck	Bore size	Sensor	Type	Number of sensor
HPC :Parallel type **HYC** :Fulcrum type	**10** :Ø10 **16** :Ø16 **20** :Ø20 **25** :Ø25 **32** :Ø32	**Blank** :W/O sensor **SR** :Round type 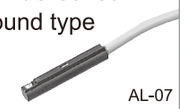 AL-07 **SU** :Square type  AL-16	**Blank** :Reed switch **D** :NPN **E** :PNP	1 pc 2 pcs

*Sensor please refer to P3-191, P3-193

Specifications

Bore size	Ø10	Ø16	Ø20	Ø25	Ø32
Port size	M3	M5			
Gripping gap distance (For HPC)	4mm	8mm	12mm	14mm	16mm
Gripping force (For HPC)	5N	17.6N	34.3N	58.8N	83.3N
Operating angle (For HYC)	-10° ~ +30°				
Fluid	Compressed air				
Acting	Double acting				
Operating pressure range	1.5 ~ 7 kgf/cm²				
Max. operating pressure	10.5 kgf/cm²				
Lubrication	Not required or few				
Body material	Aluminum alloy				
Magnet	Built-in				
Ambient temperature	0°C ~ 60°C				
Operating frequency	50 ~ 700 mm/Sec.				

Dimensions

HPC-10

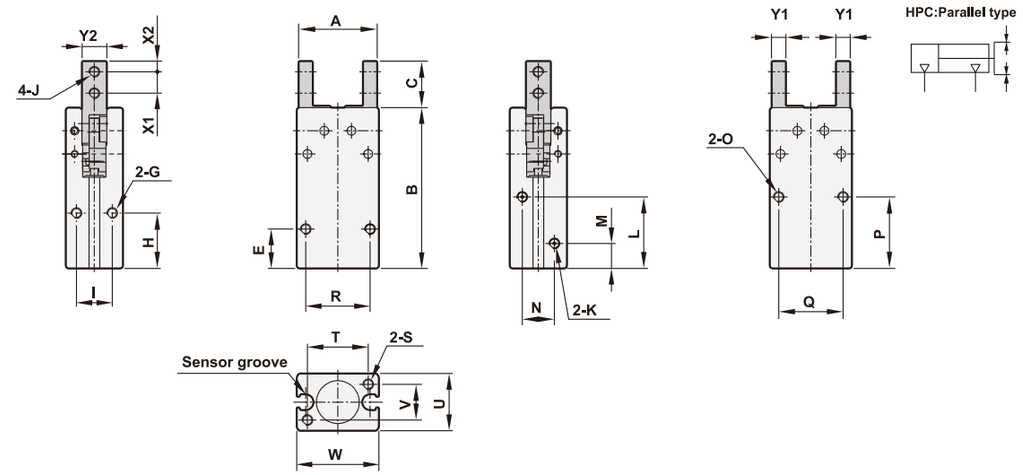

HPC-16~32

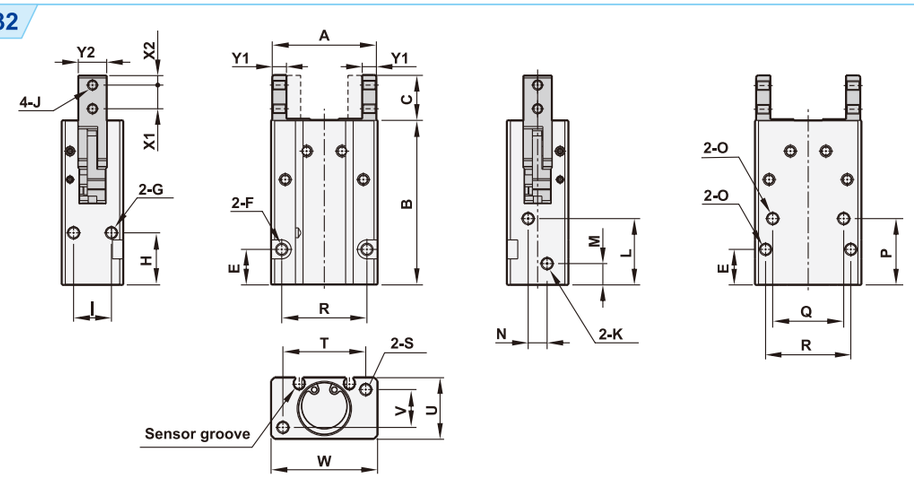

(Unit: mm)

Model	A Open	A Closed	B	C	E	F	G	H	I	J
HPC-10	22°	18°	45	13	11	M3xP0.5xL8.0	M3xP0.5xDepth5.0	15.5	10	M3xP0.5 through
HPC-16	33°	25°	58.5	15	14	Ø3.4 through, Ø6 Counter bore x Depth 3.5	M4xP0.7xDepth8.0	21	14	M3xP0.5 through
HPC-20	44°	32°	69.5	19	15	Ø4.3 through, Ø8 Counter bore x Depth 4.6	M5xP0.8xDepth10.0	22	16	M4xP0.7 through
HPC-25	51°	37°	79.5	24	16	Ø5.3 through, Ø9.5 Counter bore x Depth 5.5	M6xP1.0xDepth12.0	24.5	20	M5xP0.8 through
HPC-32	60°	44°	88	31	18	Ø5.3 through, Ø9.5 Counter bore x Depth 5.5	M6xP1.0xDepth15.0	30	26	M6xP1.0 through

Model	K	L	M	N	O	P	Q	R	S	T	U	V	W	X1	X2	Y1	Y2
HPC-10	M3xP0.5	20	7	6	M3xP0.5xL8.0	20	18	18	M3xP0.5xL5.0	17	16	10	23	6	3	4	7
HPC-16	M5xP0.8	23	8	6	M4xP0.7xL8.0	25.5	24	28	M4xP0.7xL8.0	26	22	14	34	8	3	4	11
HPC-20	M5xP0.8	28	9	8	M5xP0.8xL10.0	28	30	36	M5xP0.8xL10.0	35	26	16	45	10	4	6	12
HPC-25	M5xP0.8	30.5	9.5	18	M6xP1.0xL12.0	31.5	36	40	M6xP1.0xL10.0	40	32	20	52	12	5	8	14
HPC-32	M5xP0.8	34	10	24	M6xP1.0xL15.0	37.5	44	50	M6xP1.0xL10.0	46	40	26	60	15	7	9	18

Dimensions

HYC-10

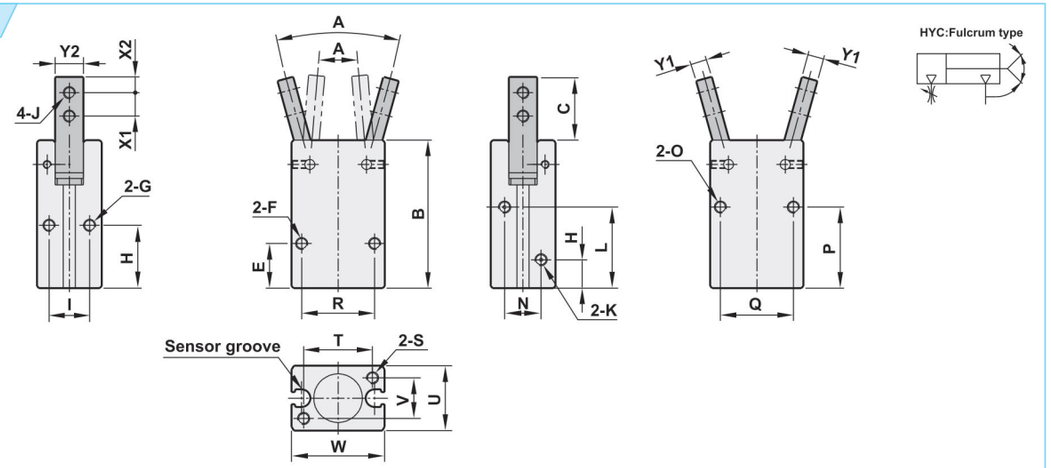

HYC-16~32

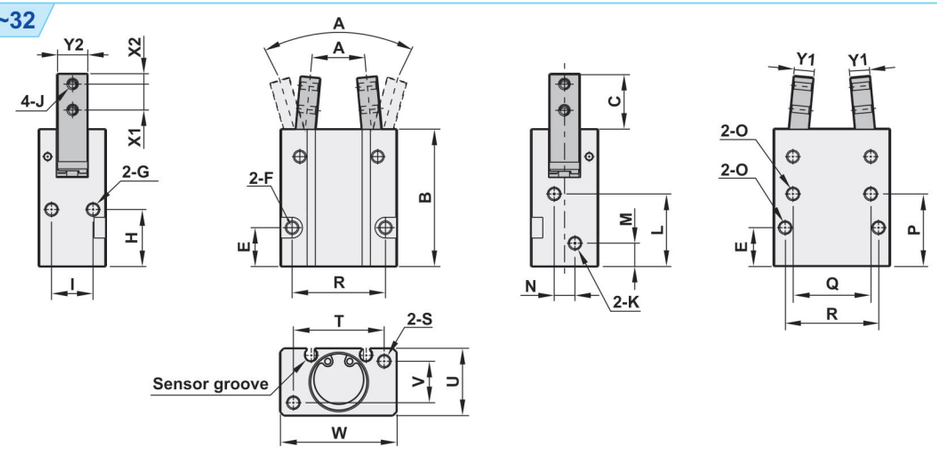

(Unit: mm)

Model	A Open	A Close d	B	C	E	F	G	H	I	J
HYC-10	30°	-10°	36.5	15.7	11	M3xP0.5xL8.0	M3xP0.5xL5.0	15.5	10	M3xP0.5 through
HYC-16	30°	-10°	45.5	15.8	14	ϕ 3.4 through, ϕ 6 Counter bore x L3.5	M4xP0.7xL8.0	21	14	M3xP0.5 through
HYC-20	30°	-10°	53	22	15	ϕ 4.2 through, ϕ 8 Counter bore x L4.6	M5xP0.8xL10.0	22	16	M4xP0.7 through
HYC-25	30°	-10°	61	26	16	ϕ 5.3 through, ϕ 9.5 Counter bore x L5.5	M6xP1.0xL12.0	24.5	20	M5xP0.8 through
HYC-32	30°	-10°	68	30	18	ϕ 5.3 through, ϕ 9.5 Counter bore x L5.5	M6xP1.0xL15.0	30	26	M6xP1.0 through

Model	K	L	M	N	O	P	Q	R	S	T	U	V	W	X1	X2	Y1	Y2
HYC-10	M3xP0.5	20	7	9	M3xP0.5xL8.0	20	18	18	M3xP0.5xL8.0	17	16	10	23	6	3	4	7
HYC-16	M5xP0.8	23	8	6	M4xP0.7xL8.0	25.5	24	28	M4xP0.7xL8.0	26	22	14	34	8	3	6	9
HYC-20	M5xP0.8	28	9	8	M5xP0.8xL10.0	28	30	36	M5xP0.8xL10.0	35	26	16	45	10	4	7	12
HYC-25	M5xP0.8	30.5	9.5	18	M6xP1.0xL12.0	31.5	36	40	M6xP1.0xL10.0	40	32	20	52	12	5	9	14
HYC-32	M5xP0.8	34	10	24	M6xP1.0xL15.0	37.5	44	50	M6xP1.0xL10.0	46	40	26	60	14	6	10	18

Theoretical force

Bore size	Piston area cm²	Operating pressure kgf/cm²					
		2	3	4	5	6	7
ϕ 10	0.79	1.58	2.37	3.16	3.95	4.74	5.53
ϕ 16	2.01	4.02	6.03	8.04	10.5	12.06	14.07
ϕ 20	3.14	6.28	9.42	12.56	157	18.84	21.98
ϕ 25	4.91	9.82	14.73	19.64	24.55	29.46	34.37
ϕ 32	8.04	16.08	24.12	32.16	40.2	48.24	56.28

Mounting example

Bottom mounting	Side mounting
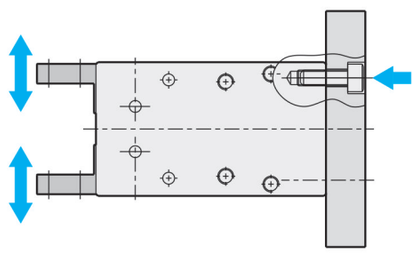	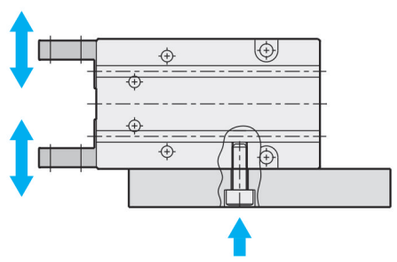
Top face mounting	**Bottom face mounting**
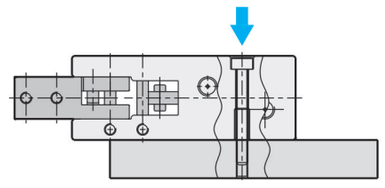	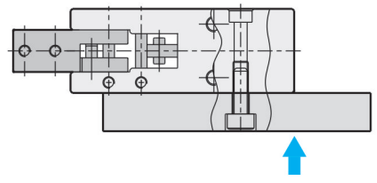

Material of parts

HPC: Parallel type

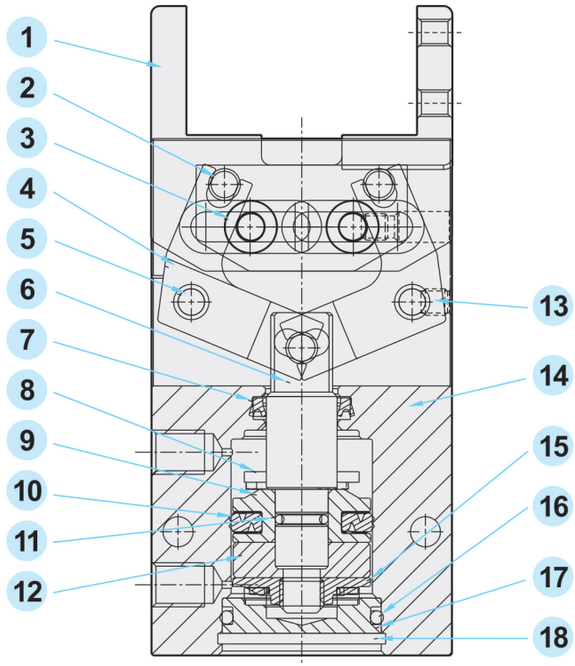

No.	Description	Material	Qty
1	Gripper	Stainless steel	2
2	Pin	Carbon steel	3
3	Roller	Carbon steel	4
4	Lever	Stainless steel	2
5	Lever shaft	Carbon steel	4
6	Piston rod	S45C+Cr	1
7	U-ring	NBR	1
8	Gasket	NBR	2
9	Piston	Aluminum alloy	1
10	U-piston seal	NBR	1
11	O-ring	NBR	1
12	Magnet	Ferrite magnet	1
13	Plug	Carbon steel	4
14	Body	Aluminum alloy	1
15	Magnet holder	Aluminum alloy	1
16	O-ring	NBR	1
17	End cover	Aluminum alloy	1
18	C type snap ring	Fe+Ni	1

HYC: Fulcrum type

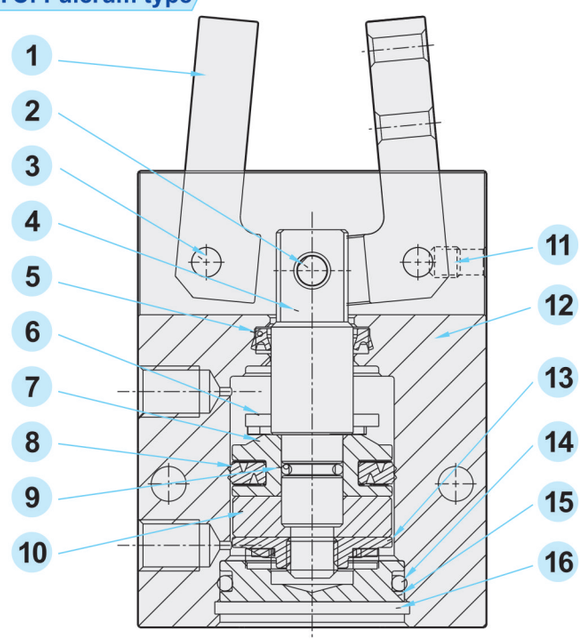

No.	Description	Material	Qty
1	Gripper	Stainless steel	2
2	Pin	Carbon steel	1
3	Lever shaft	Carbon steel	2
4	Piston rod	S45C+Cr	1
5	U-ring	NBR	1
6	Gasket	NBR	2
7	Piston	Aluminum alloy	1
8	U-piston ring	NBR	1
9	O-ring	NBR	1
10	Magnet	Ferrite magnet	1
11	Plug	Carbon steel	2
12	Body	Aluminum alloy	1
13	Magnet holder	Aluminum alloy	1
14	O-ring	NBR	1
15	End cover	Aluminum alloy	1
16	C type snap ring	Fe+Ni	1

Memo..

Parallel Gripper (2-Finger)

Features

1. Compact design to ensure minimum interference while operating; robust T rail design, ensure accurate gripping.
2. Can reach maximum torque suitable for long jaws design.
3. Oval piston-driven design ensure maximum gripping force.
4. Hose-free direct connection: Air supply channel can connect directly without piping or through tread to assure the flexibility of supplying compressed air on any kind of automation system.

How to order

SRGN	–	50
Parallel Gripper (2-Finger)	Body Specification	
	50	125
	66	160
	80	
	100	

Specifications

Model	SRGN					
Acting type	Double acting					
Body specification (mm)	50	66	80	100	125	160
Stroke per-jaw (mm)	4	6	8	10	12	16
Closing force (N)	170	300	550	740	1290	1860
Opening force (N)	185	325	590	795	1370	1960
Close/Open time (1/s)	0.02	0.03	0.04	0.07	0.1	0.1
Fluid	Air					
Operating pressure range	3 ~ 8 kgf/cm²					
Compressed air consumption (cm³)	4.1	10.1	23.6	39.3	85	85
Ambient temperature	+5° ~ +80°					
Lubrication	Not required					
Accessories	Mounting block, Centering sleeve					
Weight (kg)	0.14	0.27	0.495	0.85	1.6	3.0
Recom. workpiece weight (kg)	0.85	1.4	2.6	3.6	6.3	9.2

Dimensions

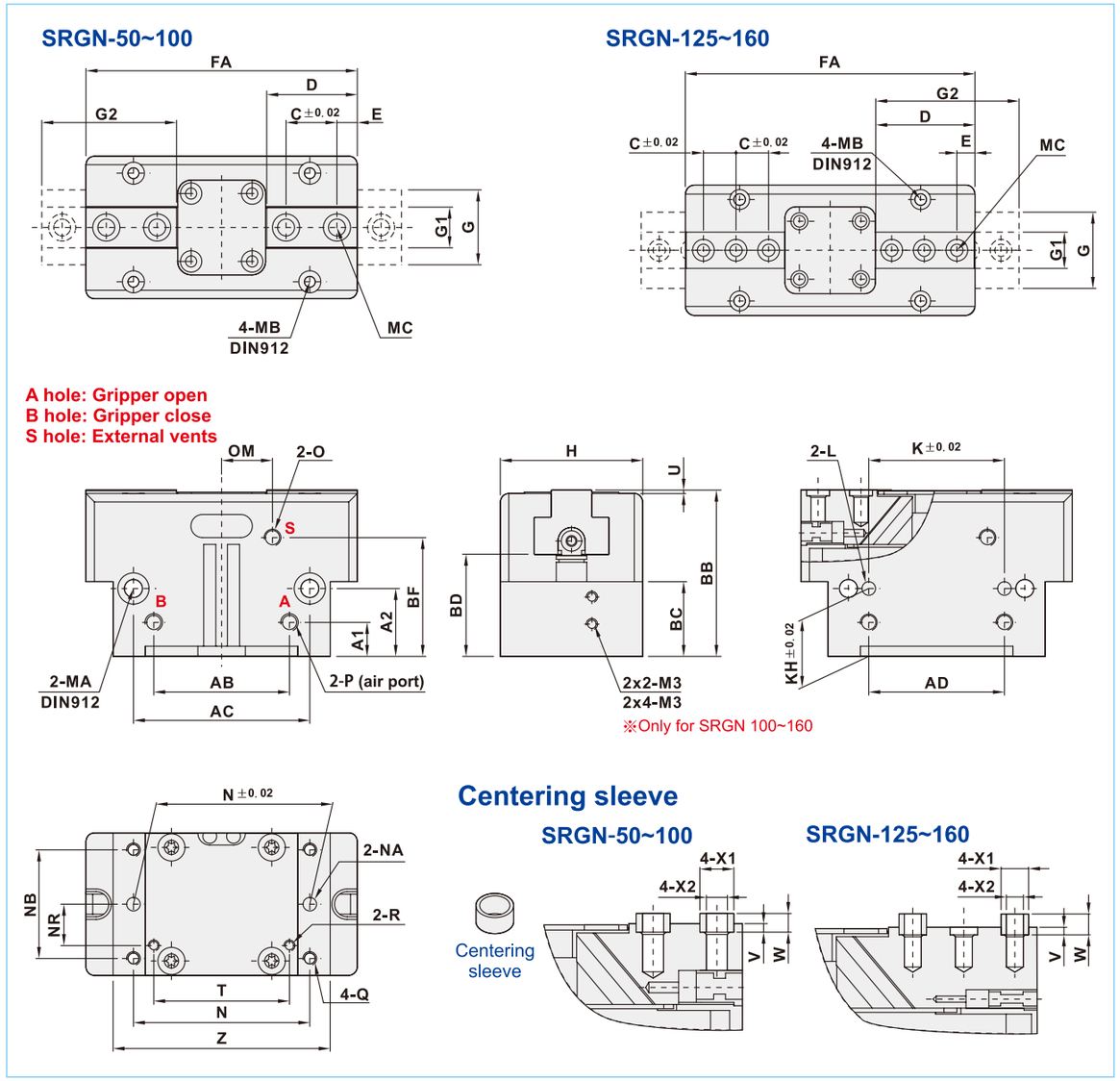

Model	A1	A2	AB	AC	AD	BB	BC	BD	BF	C	D	E	FA	G	G1	G2	H	K	KH	L
SRGN-50	5	15	25	35	25	31	15	19	22	8	16	4	50	12	6.5	20	27.8	25	15	ϕ3H7x4.5dp
SRGN-66	5	18	28	42	28	39	18.5	23	27.5	12	22	5	64	17	10	28	36	20	18	ϕ4H7x4dp
SRGN-80	10	20	40	52	40	49	22	30	35	15	26.7	6	80	22	12	34.7	42	40	20	ϕ4H7x6dp
SRGN-100	12	25	48	66	54	55	28	33	38	18	34.3	10	100	26	14	44.3	50	50	25	ϕ5H7x7dp
SRGN-125	13	30	62	82	65	64	32	38.5	45	12.5	42.3	12	125	31	15.5	54.3	60	60	30	ϕ6H7x8dp
SRGN-160	15.5	28	78	100	82	78	39	46	53	18	54.8	16	160	39	20	70.8	72	76	28	ϕ6H7x10dp

Model	MA	MB	MC	N	NA	NB	NR	O	OM	P	Q	R	T	U	V	W	X1	X2	Z
SRGN-50	M3	M3	4-M3	35	ϕ3H7	20	8	M3	10	M5	M4	M2	25	1	2	3.9	ϕ5	ϕ3.5	42
SRGN-66	M4	M4	4-M4	42	ϕ4H7	27	11	M5	12	M5	M5	M3	28	1	2	3.9	ϕ6	ϕ4.5	52
SRGN-80	M4	M4	4-M6	52	ϕ4H7	32	12.2	M5	15	M5	M5	M3	40	1	2	3.9	ϕ8	ϕ6.5	64
SRGN-100	M5	M5	4-M6	66	ϕ5H7	38	16	M5	16	G1/8	M6	M5	48	1	2	3.9	ϕ10	ϕ6.5	80
SRGN-125	M6	M6	6-M6	82	ϕ6H7	45	18	M5	20	G1/8	M8	M5	60	1	2	3.9	ϕ10	ϕ6.5	100
SRGN-160	M6	M6	6-M8	100	ϕ6H7	56	22	M5	27	G1/8	M8	M5	76	1	2	3.9	ϕ12	ϕ8.5	125

Internal structure & Movement description

Compressed air will push or press the oval piston.

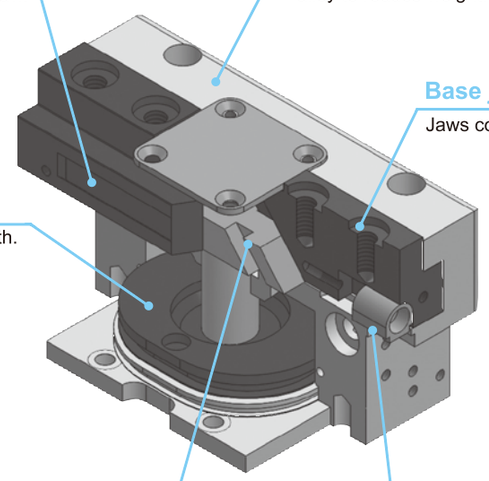

Application examples

By tilting the working surface, the wedge hook will transfer movement to side movement, and initiate the action of the two base jaws simultaneously.

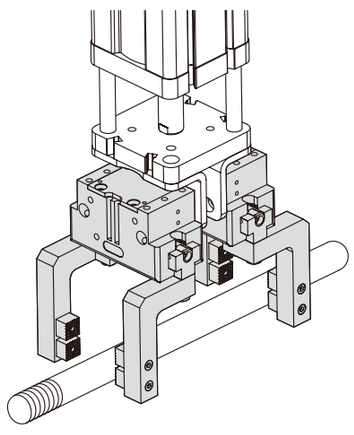

Hose-free direct connection

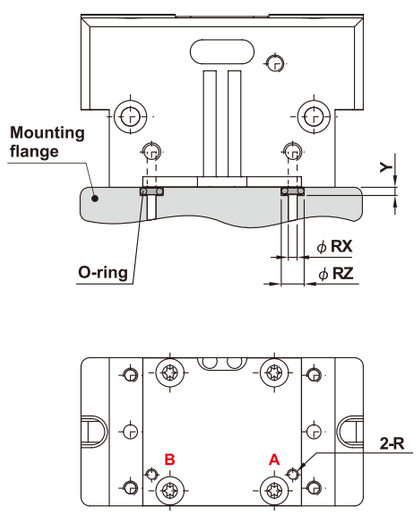

Model	R	RX	RZ	Y
50	M2	2	4	0.7
66	M3	3	5	0.7
80	M3	3	5	1.1
100	M5	5	8	1.1
125	M5	5	8	1.1
160	M5	5	8	1.1

A hole: Gripper open
B hole: Gripper close

Installation of sensor switch & speed controller

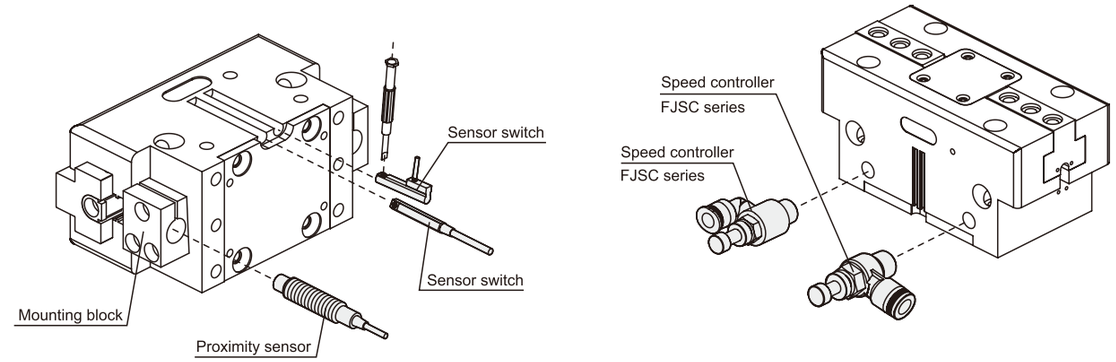

Holding force

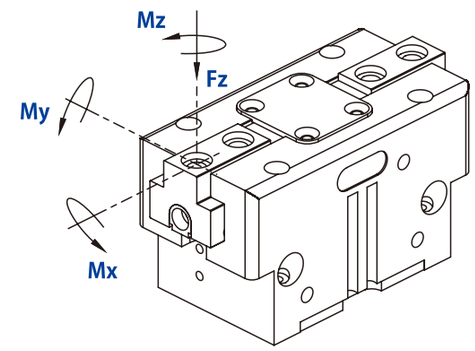

Model	Mx max. (Nm)	My max. (Nm)	Mz max. (Nm)	Fz max. (Nm)
SRGN-50	15	15	8	700
SRGN-66	50	45	35	1200
SRGN-80	80	60	50	1800
SRGN-100	100	90	75	2500
SRGN-125	120	120	100	3200
SRGN-160	160	180	140	5000

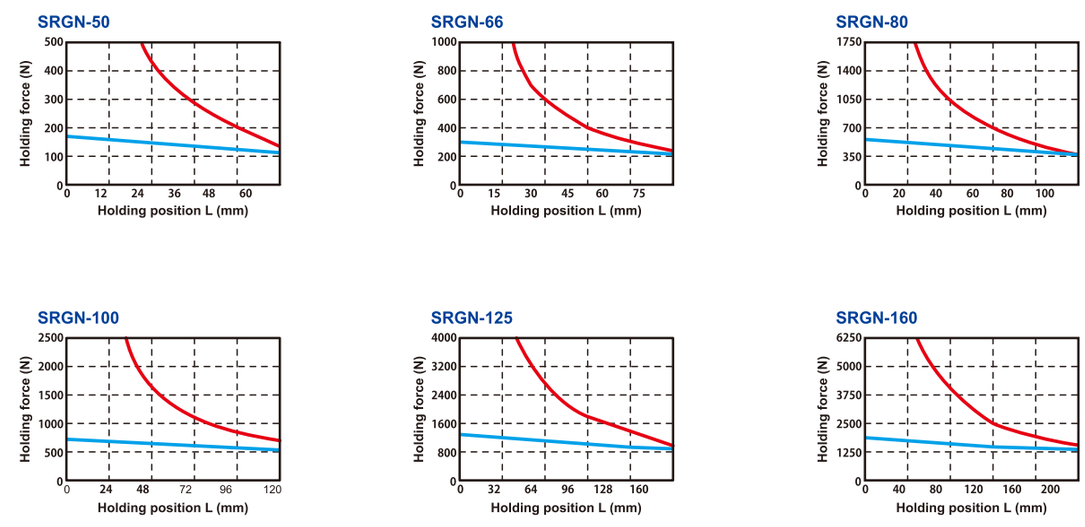

* Blue area: Less durable performance can be expected.

■ Max. feasible centrifugal degree

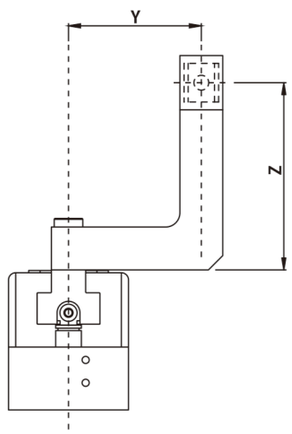

Feasible
Infeasible

SRGN-50

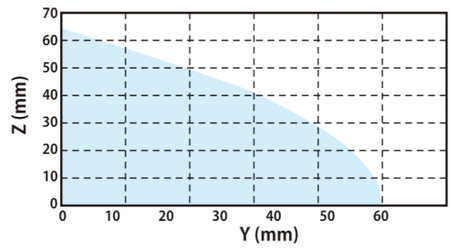

SRGN-66

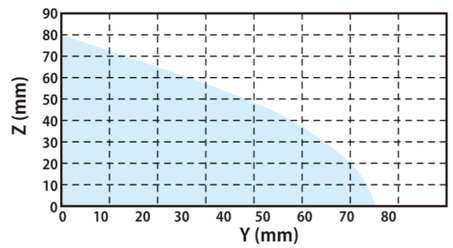

SRGN-80

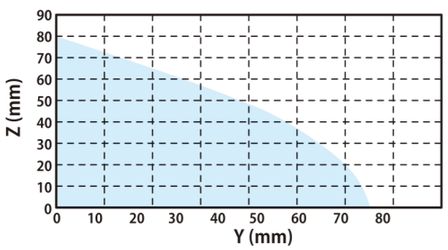

SRGN-100

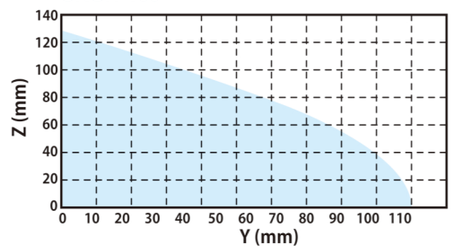

SRGN-125

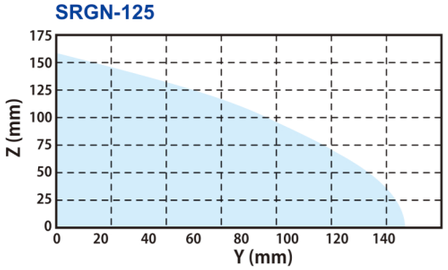

SRGN-160

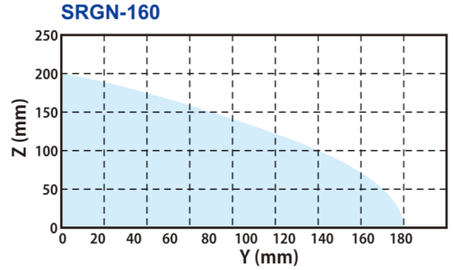

Memo...

Parallel Gripper (3-Finger)

Features

1. Compact design to ensure minimum interference while operating; robust T rail design, ensure accurate gripping.
2. Can reach maximum torque suitable for long jaws design.
3. Circular piston-driven design ensure maximum clamping force.
4. Hose-free direct connection: Air supply channel can connect directly without piping or through tread to assure the flexibility of supplying compressed air on any kind of automation system.

How to order

SRZN	–	50
Parallel Gripper (3-Finger)		Body Specification
		50 125 66 160 80 100

Specifications

Model	SRZN					
Acting type	Double acting					
Body specification (mm)	50	66	80	100	125	160
Stroke per-jaw (mm)	4	6	8	10	12	16
Closing force (N)	450	750	1200	2000	3500	6500
Opening force (N)	500	800	1300	2100	3600	6600
Close/Open time (1/s)	0.025	0.03	0.05	0.1	0.2	0.25
Fluid	Air					
Operating pressure range	2 ~ 8 kgf/cm²					
Compressed air consumption (cm³)	9.2	21.5	47	100	195	485
Ambient temperature	+5° ~ +80°					
Lubrication	Not required					
Accessories	Mounting block, Centering sleeve					
Weight (kg)	0.22	0.5	0.85	1.6	2.8	5.2
Recom. workpiece weight (kg)	2.2	3.8	6.1	10.2	17.8	33.1

Dimensions

SRZN-50~100

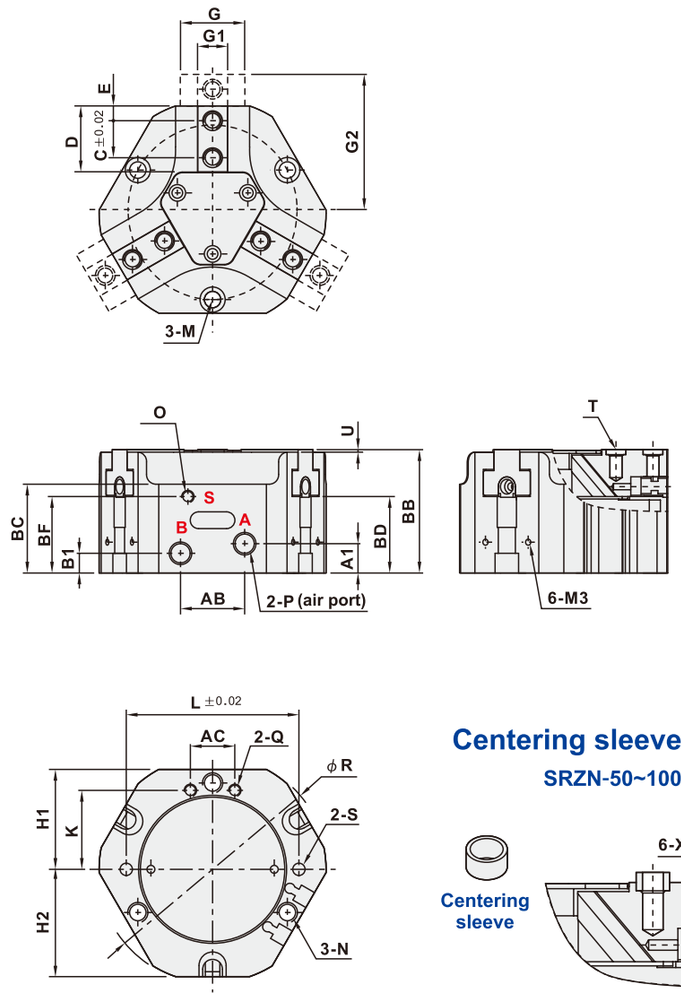

SRZN-125~160

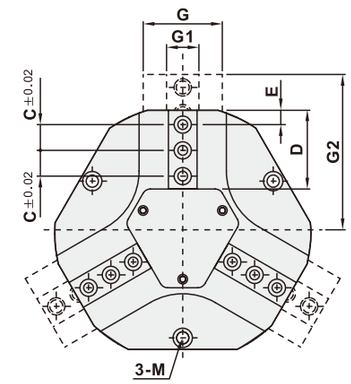

A hole: Gripper open
B hole: Gripper close
S hole: External vents

Centering sleeve

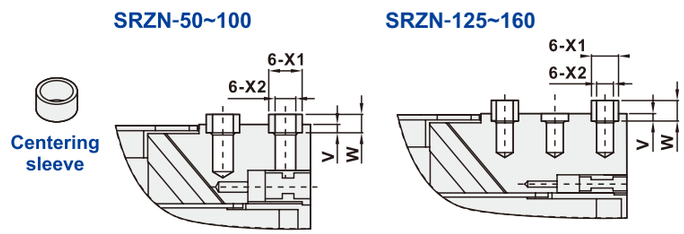

Model	A1	AB	AC	B1	BB	BC	BD	BF	C	D	E	G	G1	G2	H1	H2	K	L
SRZN-50	5	12	12	5	35	26	23	23	8	16	4	12	6.5	31	26	27	19	45
SRZN-66	11.5	12	18	5	43	32	27	27	12	22	5	17	10	41	33	35	25	56
SRZN-80	8	26	18	8	50	36	31	31	15	26.7	6	22	12	51.5	40.5	43.5	32	70
SRZN-100	13.5	24	24	10	60	41	38	34	18	34.5	10	26	14	64	51	54	42	90
SRZN-125	17	30	30	10	68	49	42.5	37	12.5	42.3	10	31	15.5	79	64	67	53	112
SRZN-160	20	44	38	10.5	80	55	48	43.8	18	54.8	10	39	20	102	81	86	67.5	146

Model	M	N	O	P	Q	R	S	T	U	V	W	X1	X2
SRZN-50	M4 DIN912	M5	M3	M5	M3	57	ϕ4H7	6-M3	1	2	3.9	ϕ5	ϕ3
SRZN-66	M5 DIN912	M6	M5	M5	M5	74	ϕ4H7	6-M4	1	2	3.9	ϕ6	ϕ4
SRZN-80	M6 DIN912	M8	M5	G1/8	M5	92	ϕ5H7	6-M6	1	2	3.9	ϕ8	ϕ6
SRZN-100	M6 DIN912	M8	M5	G1/8	M5	114	ϕ5H7	6-M6	1	2	3.9	ϕ10	ϕ6
SRZN-125	M8 DIN912	M10	M5	G1/8	M5	139	ϕ6H7	9-M6	1	2	3.9	ϕ10	ϕ6
SRZN-160	M8 DIN912	M10	M5	G1/8	M5	179	ϕ6H7	9-M8	1	2	3.9	ϕ12	ϕ8

Internal structure & Movement description

Compressed air will push or press the circular piston.

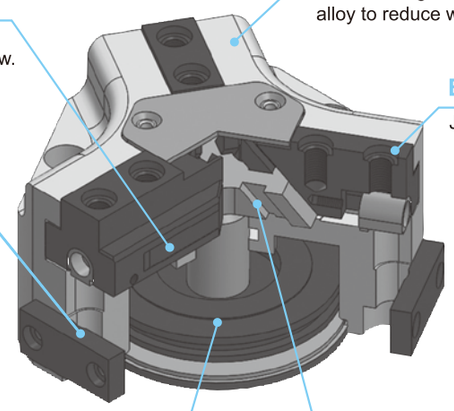

Application examples

By tilting the working surface, the wedge hook will transfer movement to side movement, and initiate the action of the three base jaws simultaneously.

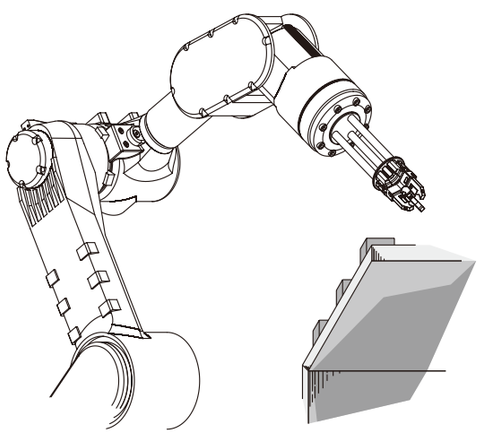

Hose-free direct connection

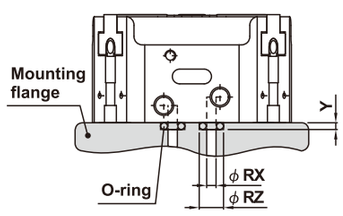

Model	Q	RX	RZ	Y
50	M3	3	5	0.7
66	M5	5	8	1.2
80	M5	5	8	1.2
100	M5	5	8	1.2
125	M5	5	8	1.2
160	M5	5	8	1.2

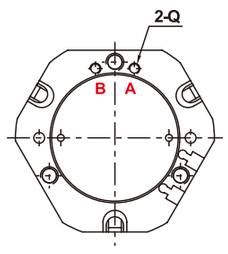

A : Gripper open
B : Gripper close

Installation of sensor switch & speed controller

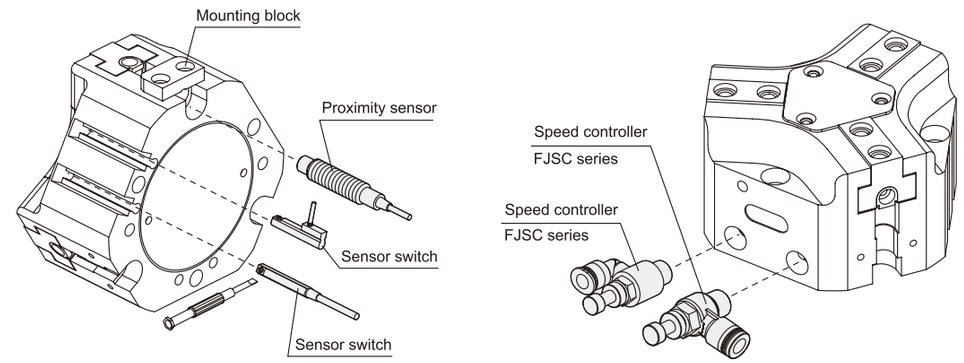

Holding force

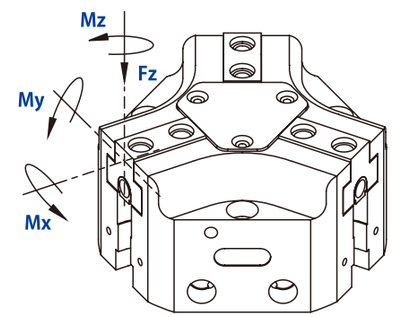

Model	Mx max. (Nm)	My max. (Nm)	Mz max. (Nm)	Fz max. (Nm)
SRZN-50	15	15	8	700
SRZN-66	50	45	35	1200
SRZN-80	80	60	50	1800
SRZN-100	100	90	75	2500
SRZN-125	120	120	100	3200
SRZN-160	160	180	140	5000

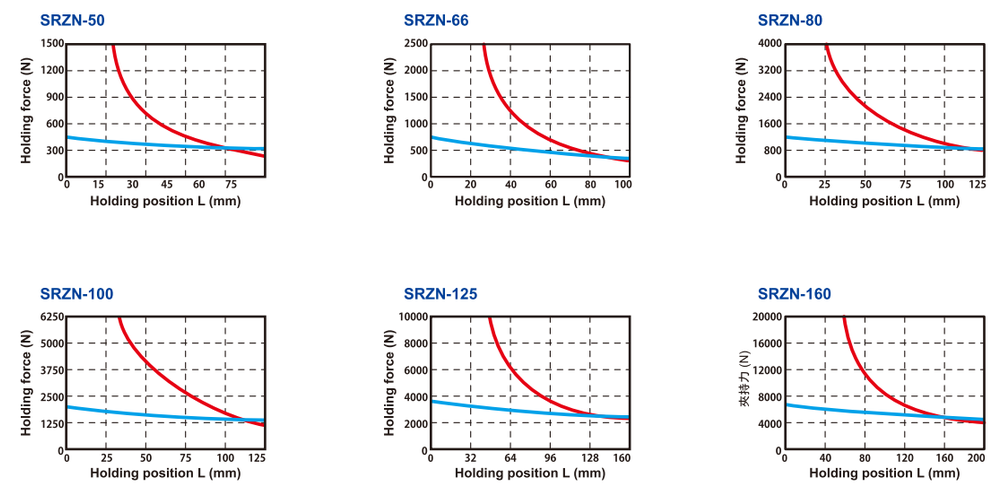

* Blue area: Less durable performance can be expected.