Rotary Cylinder

Angle Adjustable

Features

1. Available for mounting from the top or the bottom of the cylinder body.
2. Easy installation.
3. Available for 1/8" or M5 thread port connection.
4. The tolerance of inner diameter and outer diameter for turning table is H9/h9; with positioning pin hole and hollow shaft.

How to order

RCQ	30	A	SR	1
Rotary cylinder	Bore size	Angle adjustment	Sensor type	Number of sensor
	7 : ϕ12 10 : ϕ16 30 : ϕ20 50 : ϕ25	A : Stroke adjuster D : Shock absorber* (ϕ12 Not available)	Blank : W/O sensor SR : Round type AL-07R/N/P	1 pc 2 pcs

*Shock abcorber DA1008 for RCQ10, RCQ30, please refer to P6-22.
*Shock abcorber DA2020 for RCQ50 , please refer to P6-23.

*Sensor please refer to P3-191

Specifications

Model	RCQ7	RCQ10	RCQ30	RCQ50
Port size	M5	G1/8 (M5 on the side)		
Bore size	Ø12	Ø16	Ø20	Ø25
Fluid	Compressed air			
Acting	Double acting			
Max. rotating angle	190°			
Adjustable angle	0° ~ 190° (Remark 2)			
Max. operating pressure	With stroke adjuster: 7 kgf/cm²	With stroke adjuster:10 kgf/cm² ; With shock absorber: 6 kgf/cm² (Remark 1)		
Min. operating pressure	1 kgf/cm²			
Cushion	Rubber cushion	Rubber cushion / Shock absorber		
Body material	Aluminum alloy (A6061)			
Ambient temperature	0°C ~ 60°C			

Remark 1:Max. operating pressure is limited with allowable thrust of the shock absorber.
Remark 2:Be careful if the piston stroke smaller than effective stroke of the shock absorber, the rotating angle of internal shock absorber. sets below the values of following table, that will result to the energy absorption ability decreased.

Min. Rotating angle	RCQ7	RCQ10	RCQ30	RCQ50
To keep the energy absorption ability	---	52°	40°	60°

Dimensions

RCQ7A

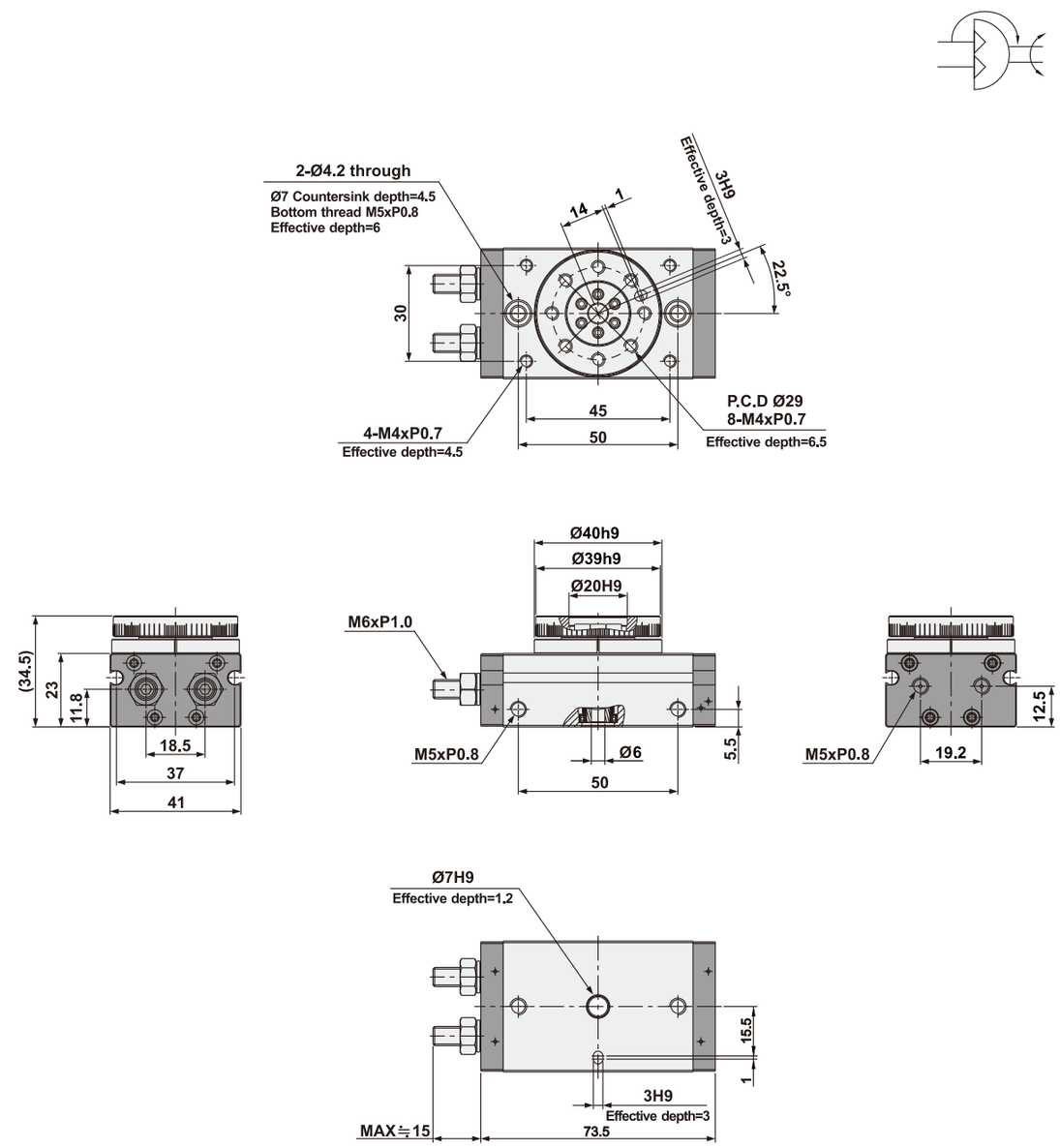

Dimensions

RCQ10A

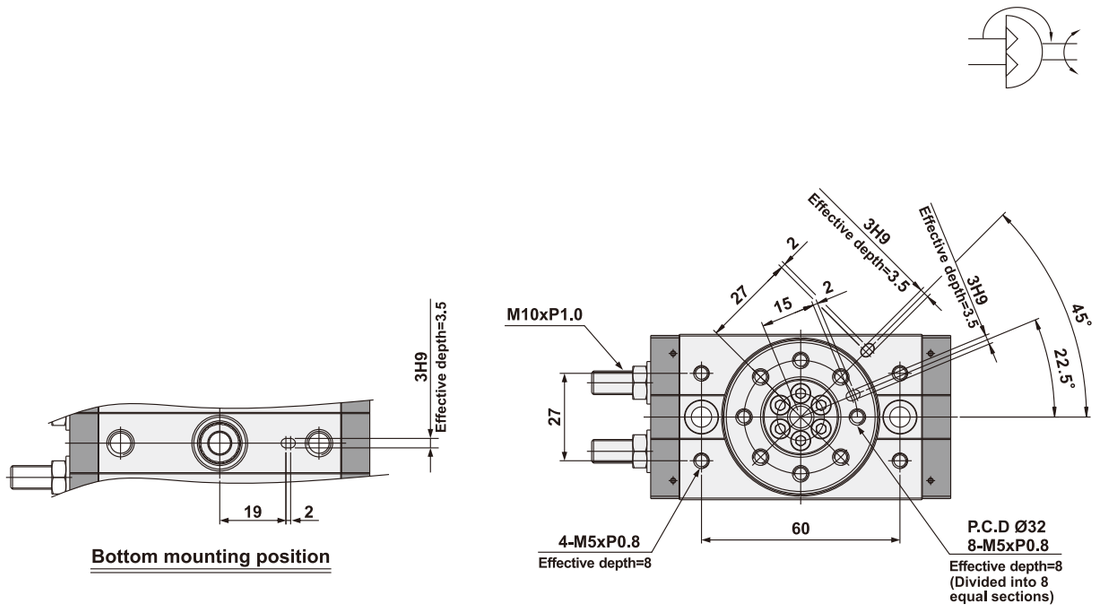

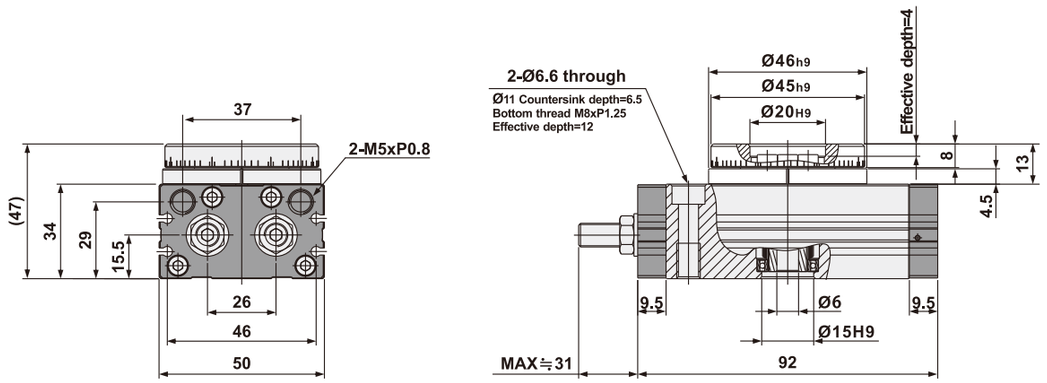

Dimensions

RCQ30A

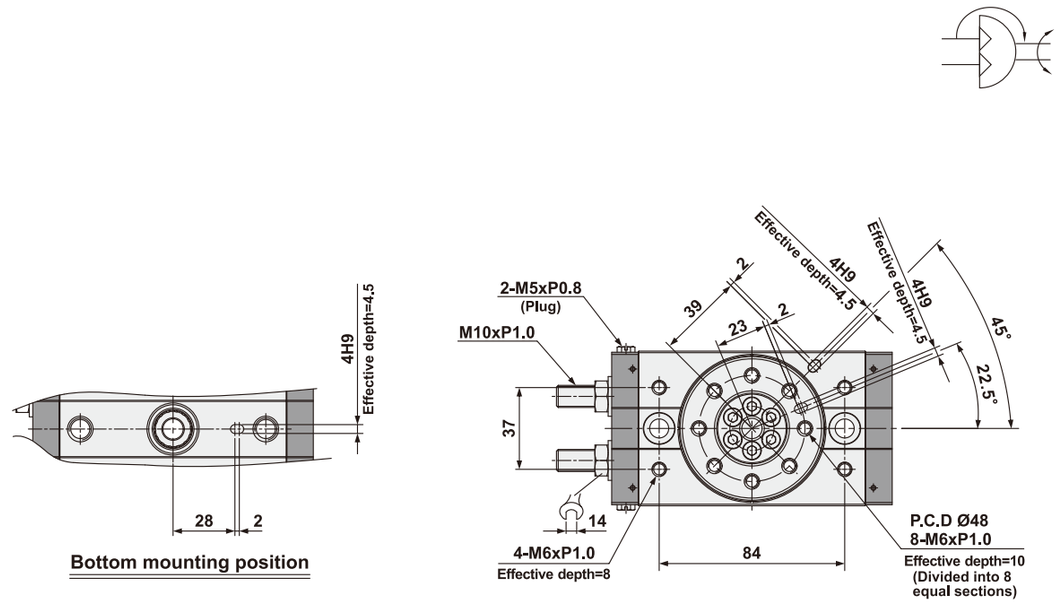

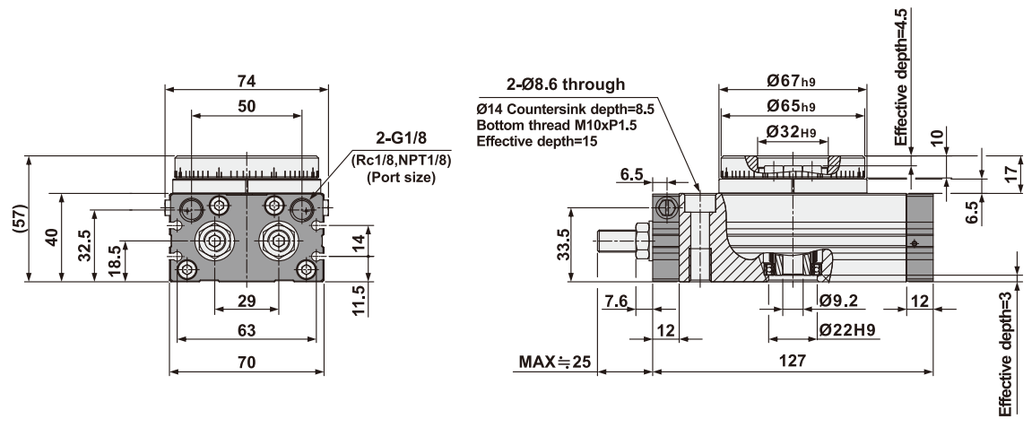

Dimensions

RCQ50A

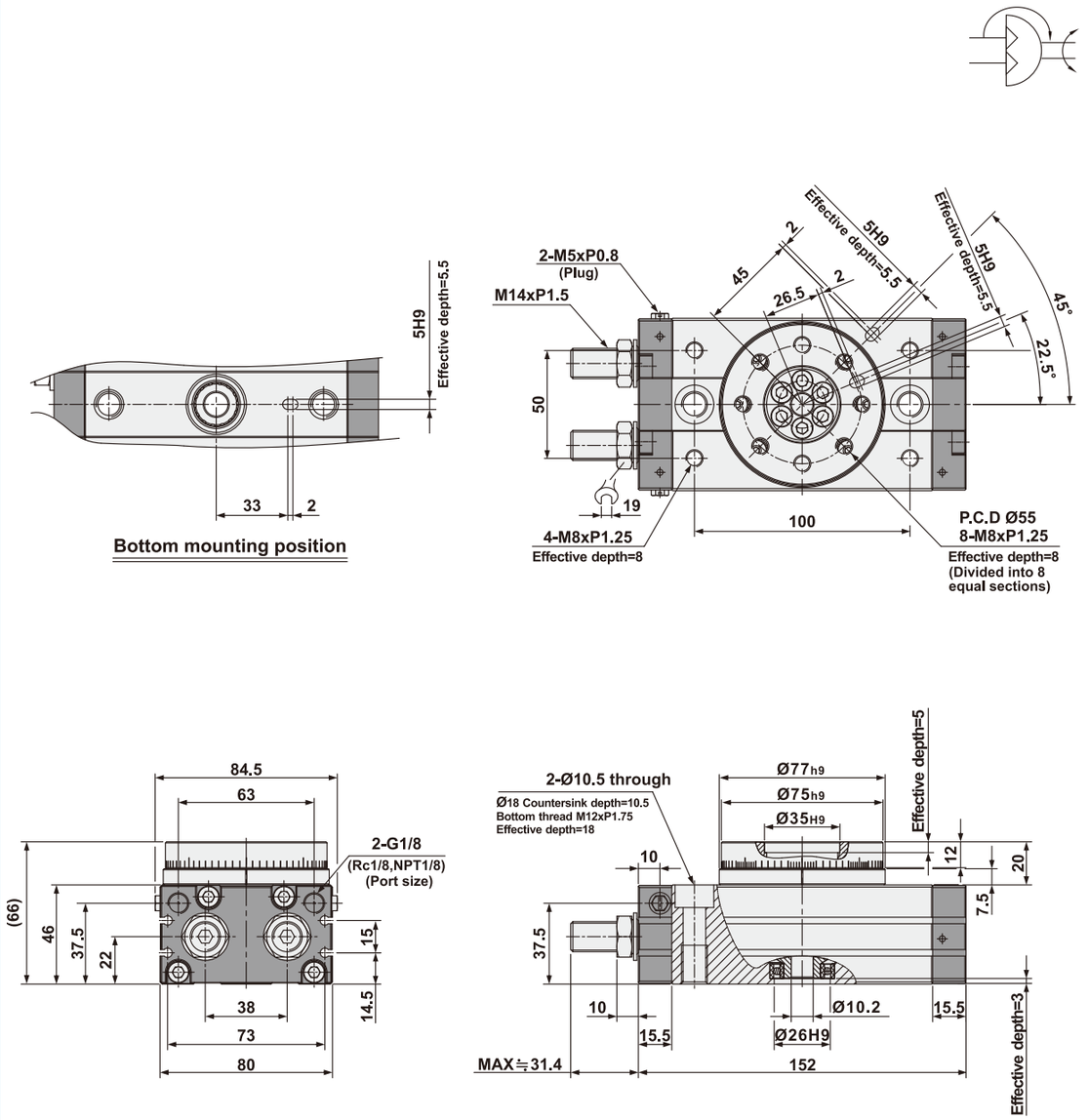

Operation

Rotating direction and Rotating angle

When supply air come in from port A, turning table rotate clockwise. When supply air come in from port B, turning table rotate counter-clockwise.

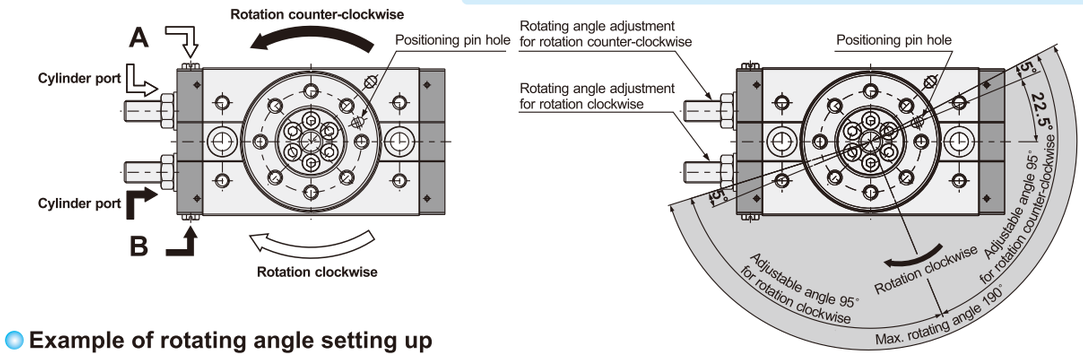

Example of rotating angle setting up

- Rotation 190° (Max. rotating angle)

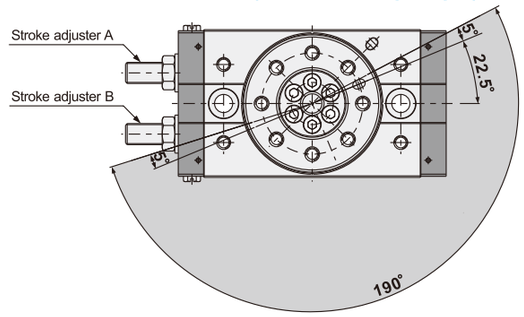

- Rotation 180°

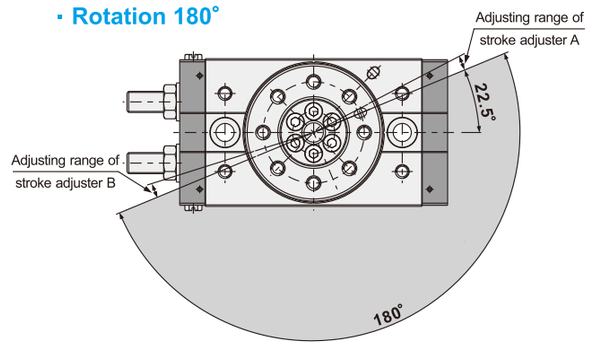

- Rotation 90°

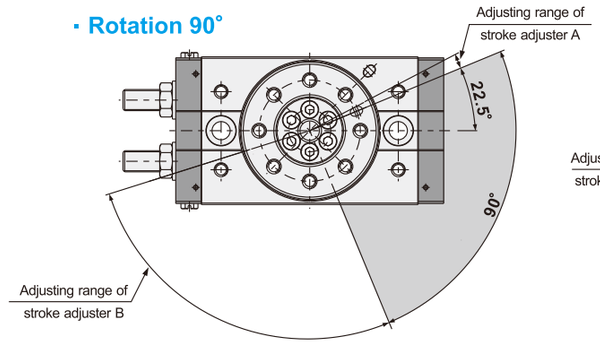

- Rotation 90°

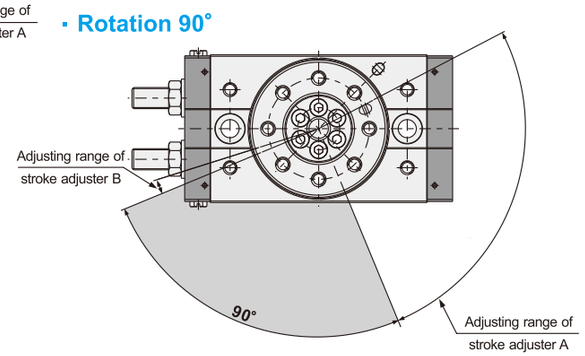

- Rotation 90°

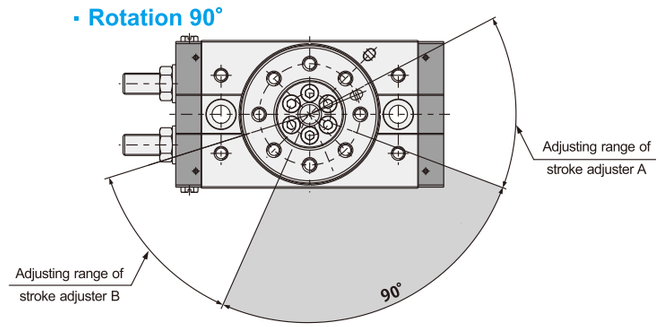

Output Torque table

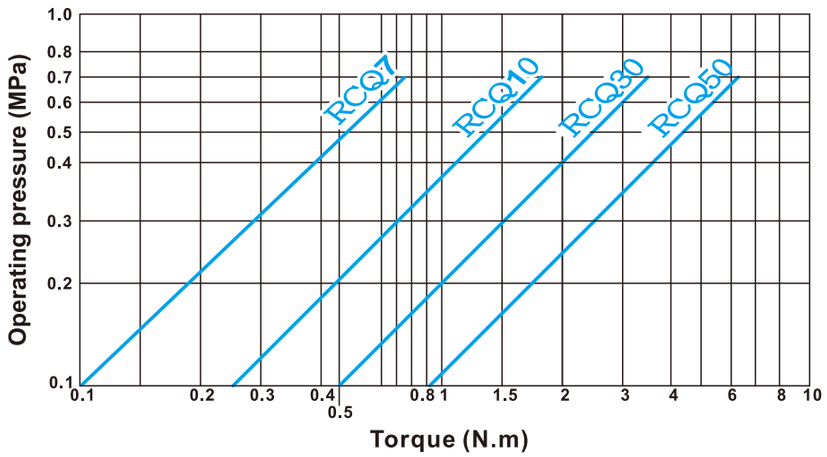

Theoretic Torque

Bore size		12	16	20	25
Operating pressure (MPa)	**0.1**	0.1	0.26	0.5	0.91
	0.2	0.21	0.52	1	1.81
	0.3	0.31	0.78	1.5	2.72
	0.4	0.41	1.04	2.01	3.62
	0.5	0.52	1.31	2.51	4.55
	0.6	0.63	1.57	3	5.45
	0.7	0.73	1.83	3.5	6.36

Allowable load

Graph	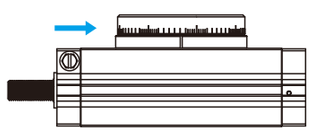	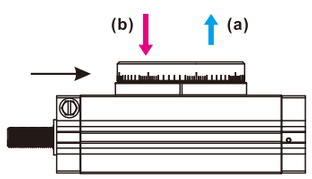		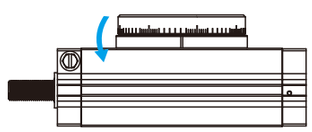
Bore size	Load from blue arrow (N)	Load from blue and red arrow (N)		Allowable torque (N)
		(a)	(b)	
Ø12	54	71	71	1.5
Ø16	78	74	78	2.4
Ø20	196	197	363	5.3
Ø25	314	296	451	9.7

Memo...

RCA Series Rotary Cylinder

Features

1. Simple operation.
2. Hard anodized aluminum body for wear and corrosion resistance.
3. Pinion and rack made of carbon steel, Provide a strong mechanism.

How to order

RCA	63	B90	SR	D	1
Rotary cylinder	Bore size	Rotating angle	Sensor	Type	Number of sensor
RCA:Single rod **RCAD**:Double rod	**63**:Ø63	**B90**:90° **B180**:180°	**Blank**:W/O sensor **SS**:Square type AL-11 **SR**:Round type 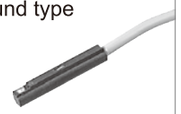 AL-07 **SU**:Square type AL-16	**Blank**:Reed switch **D**:NPN **E**:PNP	1 pc 2 pcs

*Sensor please refer to P3-191~P3-193

Specifications

Model	RCA, RCAD
Port size	Rc1/8"
Bore size	Ø63
Shaft diameter	Ø17
Fluid	Compressed air
Acting	Double acting
Allowable tolerance of rotation angle	0° ~ +4°
Operating pressure range	1 ~ 10 kgf/cm²
Max. operating pressure	10 kgf/cm²
Cushion	Air cushion
Allowable kinetic energy	Under 1.5J
Time of rotation	0.2 ~ 3 (Sec/90°)
Body material	Aluminum alloy (6061T6)
Ambient temperature	-10°C ~ 60°C

Dimensions

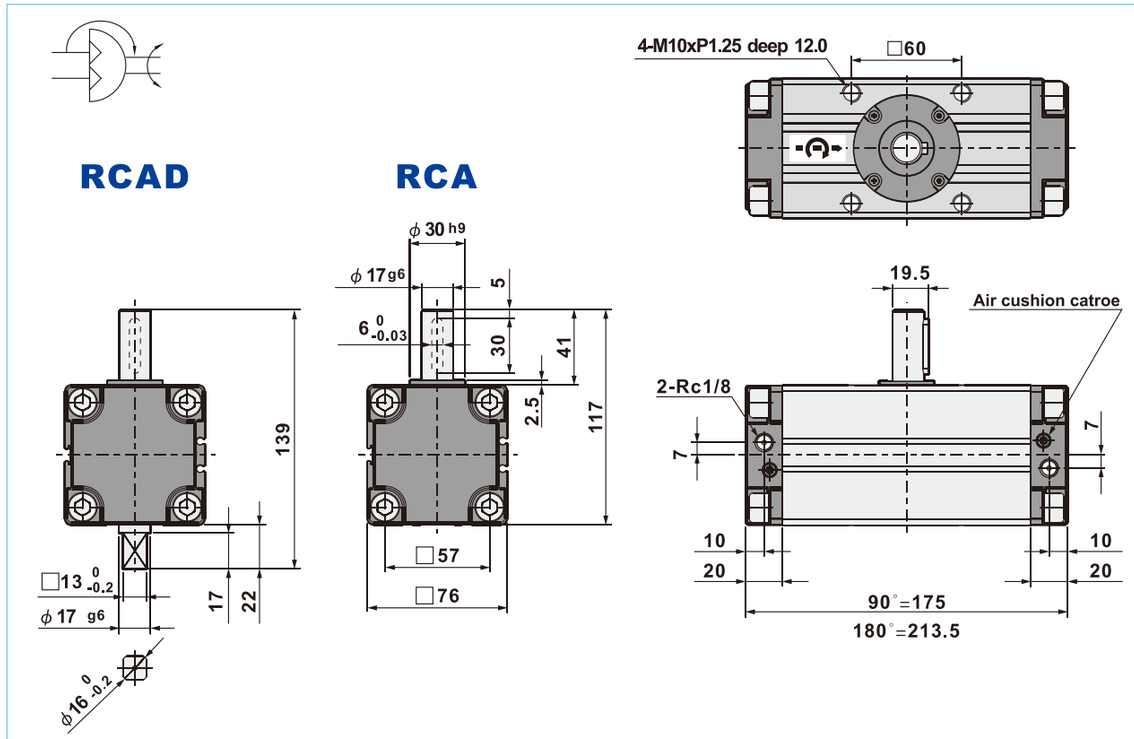

Shaft Rotary Range

*Compressed air to A port, shaft rotates clockwise.
*Compressed air to B port, shaft rotates counterclockwise.

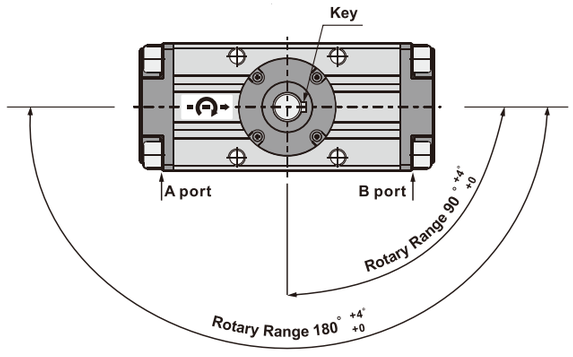

Output torque table

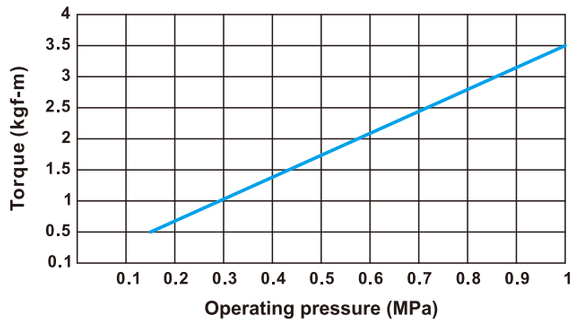

Allowable load

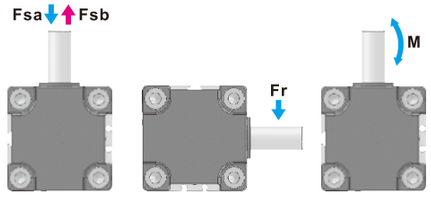

Size	Loading direction			Allowable torque
	Fsa	Fsb	Fr	M
63	588N	196N	294N	17.2N~m (Pressure 0.5kgf/cm²)

RT Series Rotary Cylinder

Features

1. Simple operation.
2. Hard anodized aluminum alloy body
3. Pinion and rack made of carbon steel offer a strong mechanism.

Allowable offer

RTH Male pivot gear (Standard type)
RTH-D Male pivot gear (Double end rod type)
RTF Female pivot gear

How to order

RTH	40	B90	D	SG	D	1
Rotary cylinder	Bore size	Rotating angle	Rod	Sensor	Type	Number of sensor
RTH:Male pivot gear (Standard) **RTF** :Female pivot gear	**40**:Ø40 **63**:Ø63 **80**:Ø80	**B90** :90° **B180**:180°	**Blank**:Single rod **D**:Double rod	**Blank**:W/O sensor **SG** :Round type AL-65	**Blank**:Reed switch **D**:NPN **E**:PNP	1 pc 2 pcs

Specifications

Model	RTH, RTF		
Bore size	Ø40	Ø63	Ø80
Shaft diameter	Ø16	Ø24	Ø28
Port size	1/4"	3/8"	3/8"
Max. allowable axial thrust	10kg	12kg	20kg
Rotation angle	90° ± 5°, 180° ± 5°		
Fluid	Compressed air		
Acting	Double acting		
Operating pressure range	1.5 ~ 7 kgf/cm²		
Max. operating pressure	7 kgf/cm²		
Body material	Aluminum alloy (6061T6)		
Ambient temperature	-10°C ~ 60°C		

Dimensions

RTH

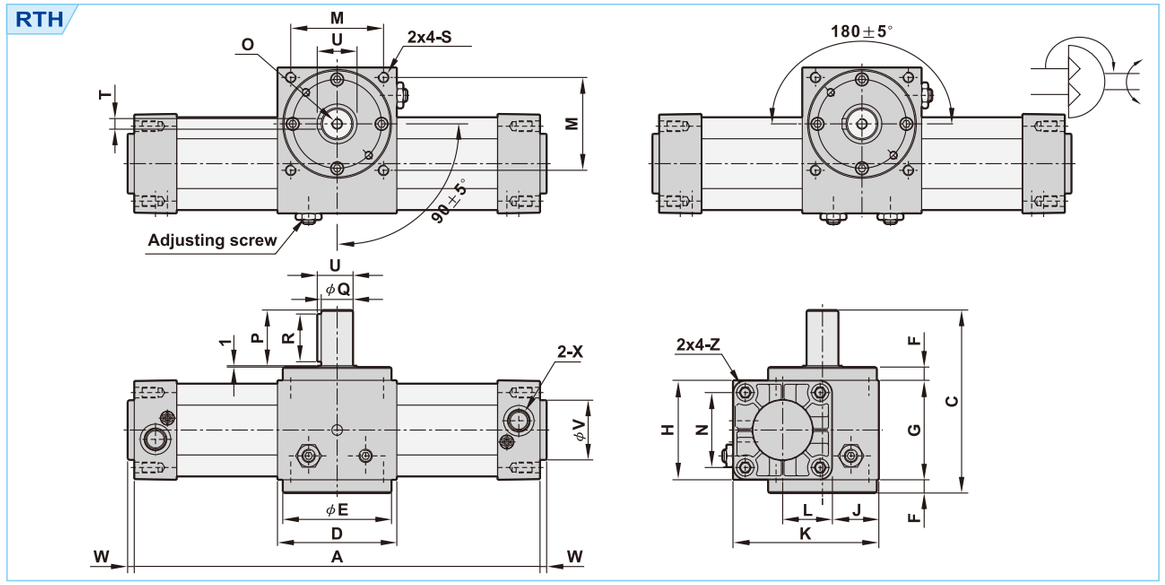

(Unit: mm)

Model	A 90°	A 180°	C	D	E	F	G	H	J	K	L	M	N	O	P	Q	R	S	T	U	V	W	X	Z
RTH40	263	326	112	75	72	8	65	53	37.5	93	27.5	60	38	M5	30	16	25	M6	5	18	35	4	G1/4	M6
RTH63	306	377	138	90	82	10	75	75	42.5	110	30	70	56.5	M8	42	24	36	M8	8	27	45	5	G3/8	M8
RTH80	343	428	170	105	96	12	95	95	51.5	135	36	82	72	M8	50	28	45	M10	8	31	45	6	G3/8	M10

RTF

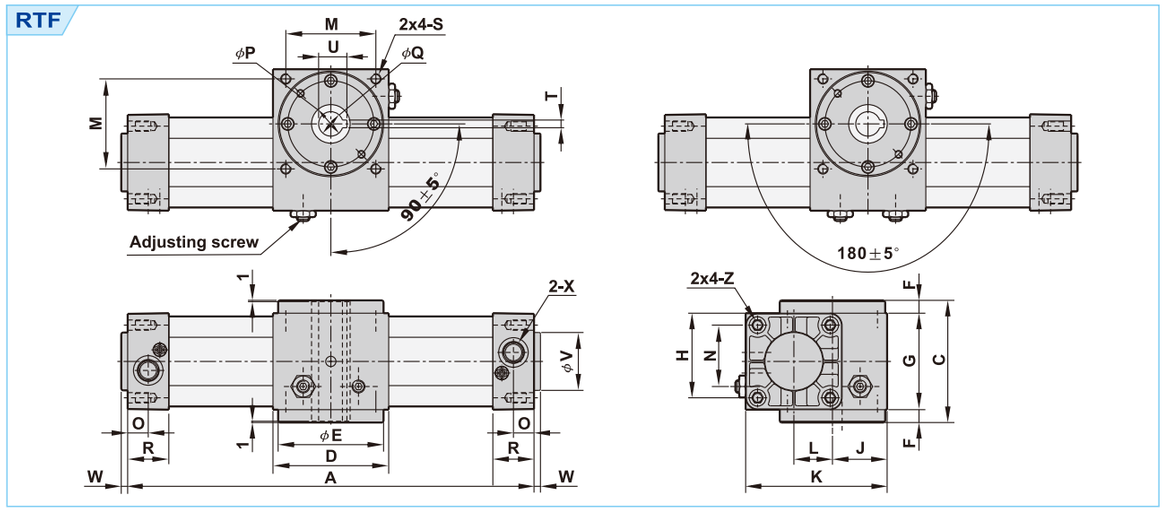

(Unit: mm)

Model	A 90°	A 180°	C	D	E	F	G	H	J	K	L	M	N	O	P	Q	R	S	T	U	V	W	X	Z
RTF40	263	326	81	75	72	8	65	53	37.5	93	27.5	60	38	15	25	14	30	M6	5	16.5	35	4	G1/4	M6
RTF63	306	377	95	90	82	10	75	75	42.5	110	30	70	56.5	16	30	19	32	M8	6	22	45	5	G3/8	M8
RTF80	343	428	119	105	96	12	95	95	51.5	135	36	82	72	19	35	24	38	M10	6	27.5	45	6	G3/8	M10

Dimensions

RTH-D

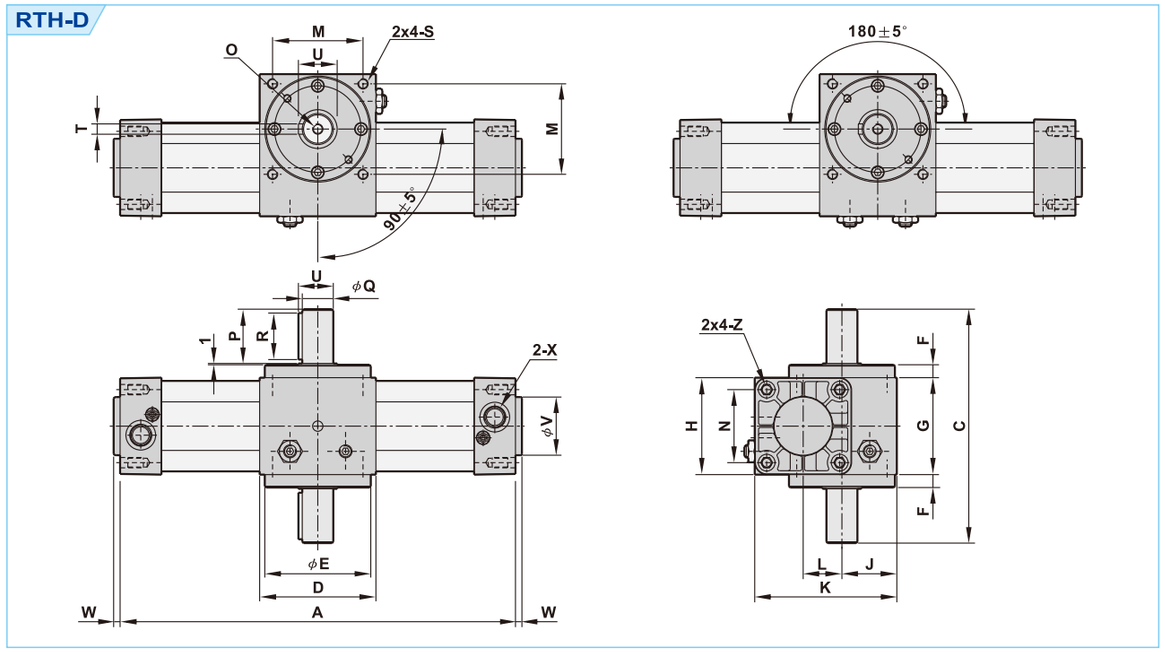

(Unit: mm)

Model	A 90°	A 180°	C	D	E	F	G	H	J	K	L	M	N	O	P	Q	R	S	T	U	V	W	X	Z
RTH40-D	263	326	143	75	72	8	65	53	37.5	93	27.5	60	38	M5	30	16	25	M6	5	18	35	4	G1/4	M6
RTH63-D	306	377	181	90	82	10	75	75	42.5	110	30	70	56.5	M8	42	24	36	M8	8	27	45	5	G3/8	M8
RTH80-D	343	428	221	105	96	12	95	95	51.5	135	36	82	72	M8	50	50	45	M10	8	31	45	6	G3/8	M10

Rotating direction and adjustable angle

RTF type

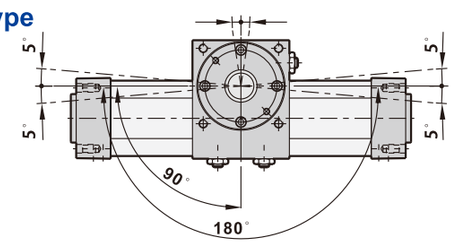

RTH, RTH-D type

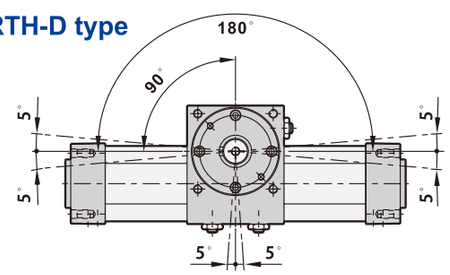

Mounting type

RTF type

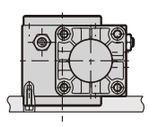

Bottom mounting

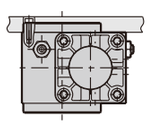

Top mounting

RTH, RTH-D type

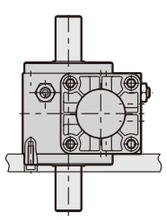

Bottom mounting

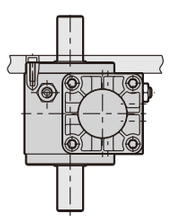

Top mounting

Dimensions

RTH,RTH-D

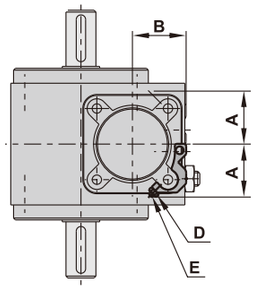

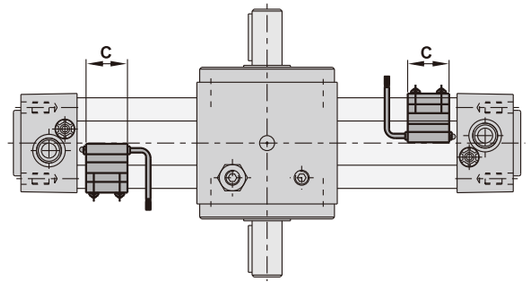

RTF

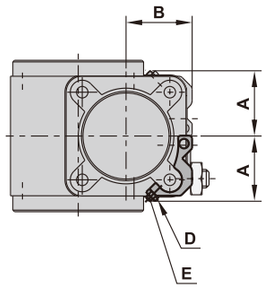

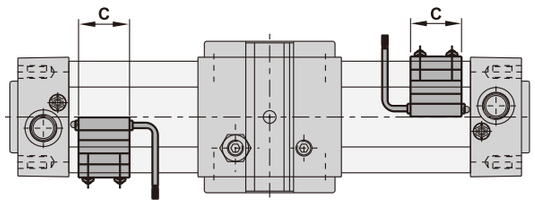

(Unit: mm)

Bore size	Sensor bracket	Weight	A	B	C	D	E
φ 40	FXX0500321	0.065	29	32	32	M4xL12	M4
φ 63	FXX0500631	0.066	40	43	32	M4xL12	M4
φ 80	FXX0500801	0.086	49.5	52	32	M4xL12	M4

Weight

(Unit: kg)

Bore size	RTF		RTH		RTH-D	
	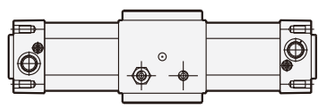		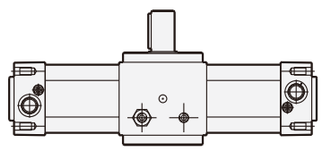		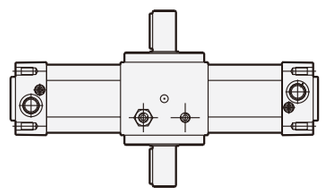	
	90°	180°	90°	180°	90°	180°
φ 40	2.84	2.94	3	3.1	3.05	3.15
φ 63	5.07	5.47	5.4	5.8	5.55	5.95
φ 80	9.19	9.74	9.75	10.3	9.99	10.54

Compressed air consumption for a complete cycle

(Unit: l/min)

Model	Rotating angle	Operating pressure (MPa)									
		0.1	0.2	0.3	0.4	0.5	0.6	0.7	0.8	0.9	1.0
RTH40/RTF40	90°	0.1571	0.2352	0.3133	0.3915	0.4696	0.5477	0.6259	0.704	0.7821	0.8603
	180°	0.3141	0.4704	0.6267	0.7829	0.9392	1.0955	1.2517	1.408	1.5643	1.7205
RTH63/RTF63	90°	0.4383	0.6564	0.8744	1.0925	1.3105	1.5286	1.7466	1.9647	2.1828	2.4088
	180°	0.8766	1.3127	1.7488	2.185	2.6211	3.0572	3.4933	3.9294	4.3655	4.8016
RTH80/RTF80	90°	0.848	1.2698	1.6917	2.1135	2.5354	2.9572	3.3791	3.8009	4.2228	4.6447
	180°	1.6959	2.5396	3.3834	4.2271	5.0708	5.9145	6.7582	7.6019	8.4456	9.2893

Compressed air consumption calculation

$$Q = 2 \times K \times A \times n \times Dg \times \frac{P+0.101}{0.101} \times 10^{-6}$$

Q: Compressed air consumption (l/cycle)

A: Piston area

Dg: Rotation

P: Air pressure

K: Constant

n: Cycle of operation(cycle/min)

Model	RTH, RTF		
Bore size (mm)	40	63	80
Constant K	0.3491	0.3927	0.4712

Output Torque table

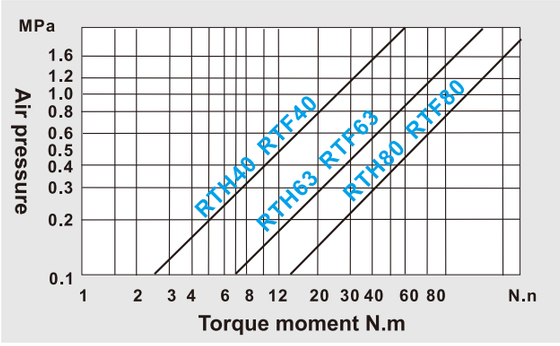

RTH/RTF Repair kit

Model	Order code	Details
RTH-ϕ40	RTHSK40	Piston packing X 2
RTH-ϕ63	RTHSK63	Cylinder gasket X 2
RTH-ϕ80	RTHSK80	Cushion packing X 2
RTF-ϕ40	RTFSK40	Needle gasket X 2
RTF-ϕ63	RTFSK63	Piston gasket X 2
RTF-ϕ80	RTFSK80	Rod packing X 1

Material of parts

RTH,RTH-D

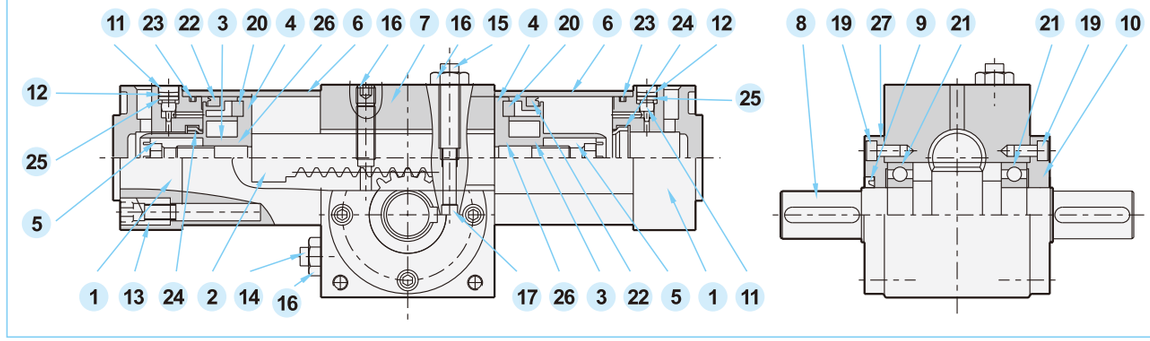

No.	Description	Qty	No.	Description	Qty	No.	Description	Qty
1	End cap	2	10	End cover	1	19	Hexagon socket head screw	8
2	Rack	1	11	Cushion needle	2	20	Magnet	2
3	Piston	2	12	Washer	2	21	Ball bearing	2
4	Magnet holder	2	13	Tie bolt	8	22	Piston packing	2
5	Piston nut	2	14	Adjusting screw	1	23	Cylinder gasket	2
6	Cylinder tube	2	15	Adjusting screw	1	24	Cushion packing	2
7	Housing	1	16	Lock nut	2	25	Needle gasket	2
8	Pinion shaft	1	17	Stopper pin	1	26	Piston gasket	2
9	Rod packing	1	18	Set screw	1	27	End cover	1

RTF

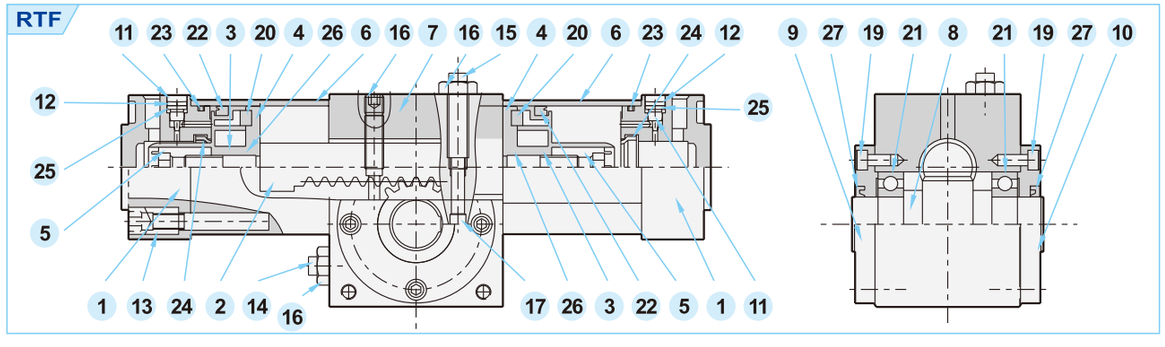

No.	Description	Qty	No.	Description	Qty	No.	Description	Qty
1	End cap	2	10	End cover	1	19	Hexagon socket head screw	8
2	Rack	1	11	Cushion needle	2	20	Magnet	2
3	Piston	2	12	Washer	2	21	Ball bearing	2
4	Magnet holder	2	13	Tie bolt	8	22	Piston packing	2
5	Piston nut	2	14	Adjusting screw	1	23	Cylinder gasket	2
6	Cylinder tube	2	15	Adjusting screw	1	24	Cushion packing	2
7	Housing	1	16	Lock nut	2	25	Needle gasket	2
8	Pinion shaft	1	17	Stopper pin	1	26	Piston gasket	2
9	End cover	1	18	Set screw	1	27	Rod packing	1

RC Series Rodless Magnetic Cylinder

Features

1. Utilize a special magnetic device to move cylinder body instead of piston rod acting, so the length of cylinder is half shorter than standard cylinder.
2. The piston in magnetic device is sealed by stainless steel tube that is completely isolated from cylinder body, which ensures leakage free and long life.
3. Moving magnetically provides stable quality, accuracy, and vibration free.
4. Automation quality test ensures excellent performance.
5. Simple installation and maintenance.

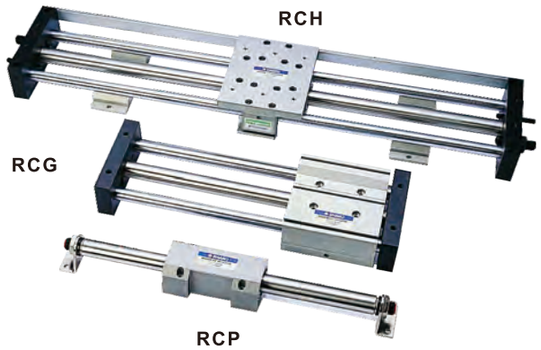

How to order

RCP	L	32	B50	A1	SS	D	1
Rodless magnetic cylinder	Guide rod	Bore size	Stroke	Shock absorber	Sensor	Type	Number of sensor
RCP:Mono-block type (W/O guide rod) **RCG**:Guide type **RCH**:Mono-block with supporting type (Ø20, Ø25)	**B**:Bush bearing **L**:Linear bearing	**20**:Ø20 **25**:Ø25 **32**:Ø32		**A1**:1 pc **A2**:2 pcs	**Blank**:W/O sensor **SS**:Square type AL-11	**Blank**:Reed switch **D**:NPN **E**:PNP	1 pc 2 pcs

*Sensor please refer to P3-192

Specifications

Bore size	Ø20	Ø25	Ø32
Port size	1/8"		1/4"
Fluid	Compressed air		
Acting	Double acting		
Operating pressure range	2 ~ 7 kgf/cm²		
Max operating pressure	10.5 kgf/cm²		
Barrel material	Aluminum alloy		
Lubrication	Not required		
Lubricant on outside rod	Required		
Magnet	Built-in		
Ambient temperature	0°C ~ 60°C		
Piston speed	500 mm/Sec		
Bush bearing	Applicable to low speed acting(Heavy loads)		
Linear bearing	Applicable to high speed acting(Light loads)		

Dimensions

RCP series

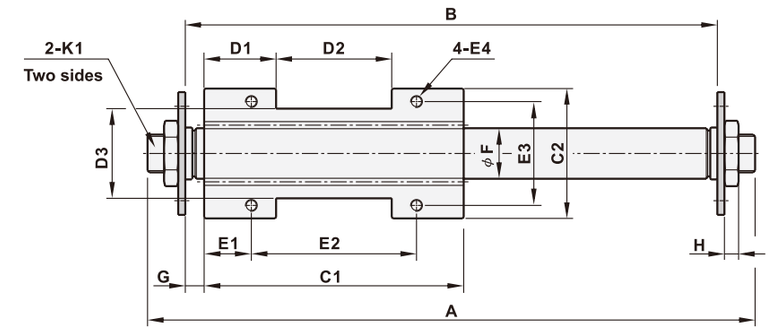

L type foot mounting (Foot downward)

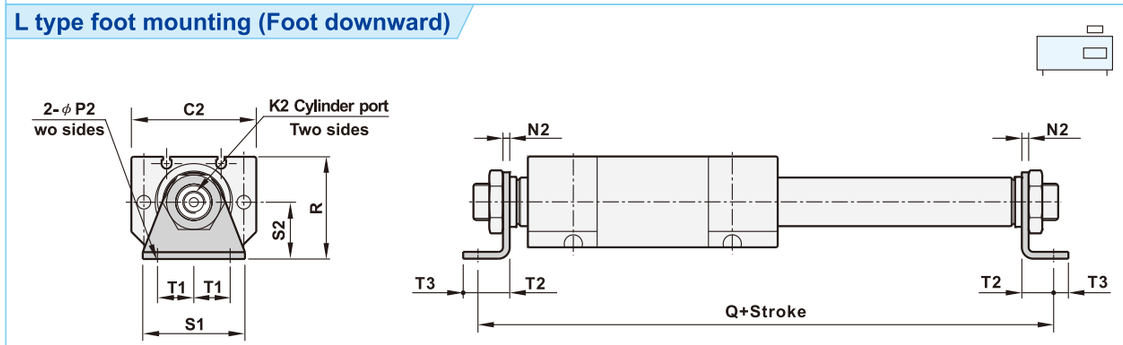

L type foot mounting (Foot upward)

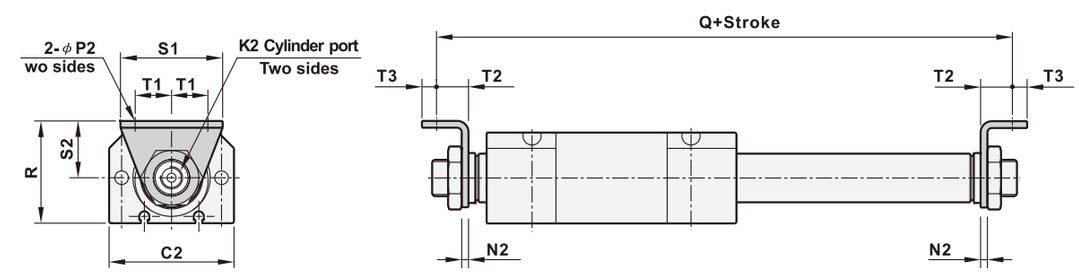

(Unit: mm)

Bore size	A	B	C1	C2	D1	D2	D3	E1	E2	E3	E4	F	G	H
Ø20	158	126	110	55	30.5	49	38	20	70	44	M5xP0.8x15dp	21.4	8	8
Ø25	166	126	110	65	30.5	49	48	20	70	54	M5xP0.8x15dp	26.4	8	8
Ø32	186	146	120	80	29	62	60	20	80	66	M6xP1.0x20dp	33.6	13	8

Bore size	K1	K2	N2	P1	P2	Q	R	S1	S2	T1	T2	T3
Ø20	M16xP1.5xL16	PT 1/8	3	20	5.5	154	45	45	25	16	14	6.5
Ø25	M22xP1.5xL20	PT 1/8	3	25	6.5	160	55	55	30	20	17	9
Ø32	M22xP1.5xL20	PT 1/8	3	25	6.5	180	65	65	35	25	17	9

Dimensions

RCG series

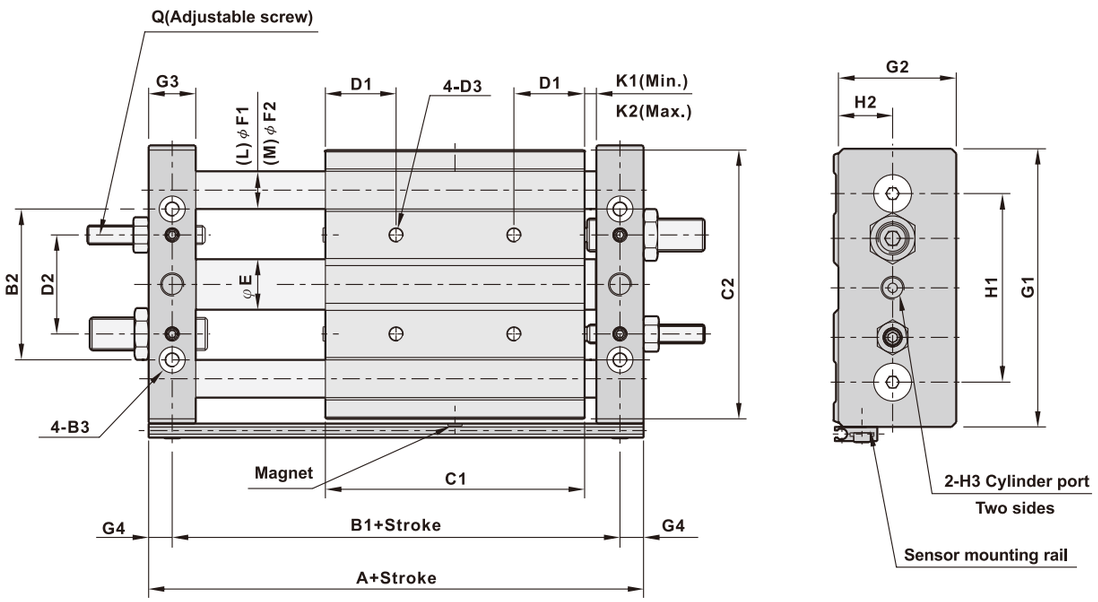

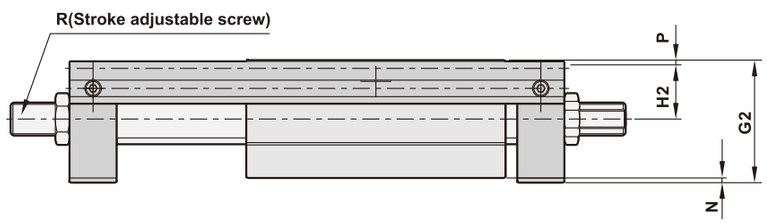

(Unit: mm)

Bore size	A	B1	B2	B3	C1	C2	D1	D2	D3	E	F1	F2	G1
Ø20	160	140	64	Ø5.2-Ø9.5x5.5dp	110	114	30	42	M6xP1.0x15dp	21.4	16	20	118
Ø25	160	140	74	Ø5.2-Ø9.5x5.5dp	110	124	30	52	M6xP1.0x15dp	26.4	16	20	128
Ø32	190	165	94	Ø6.8-Ø11x6.5dp	120	150	35	66	M8xP1.25x20dp	33.6	20	25	154

Bore size	G2	G3	G4	H1	H2	H3	K1	K2	N	P	Q	R
Ø20	50	20	10	80	23	PT 1/8	5	25	2	2	M8xP1.25xL50	M14xP1.5xL50
Ø25	54	20	10	90	25	PT 1/8	5	25	2	2	M8xP1.25xL50	M14xP1.5xL50
Ø32	62	25	12.5	112	29	PT 1/8	10	25	2	2	M14xP1.5xL50	M20xP1.5xL50

Dimensions

RCH series

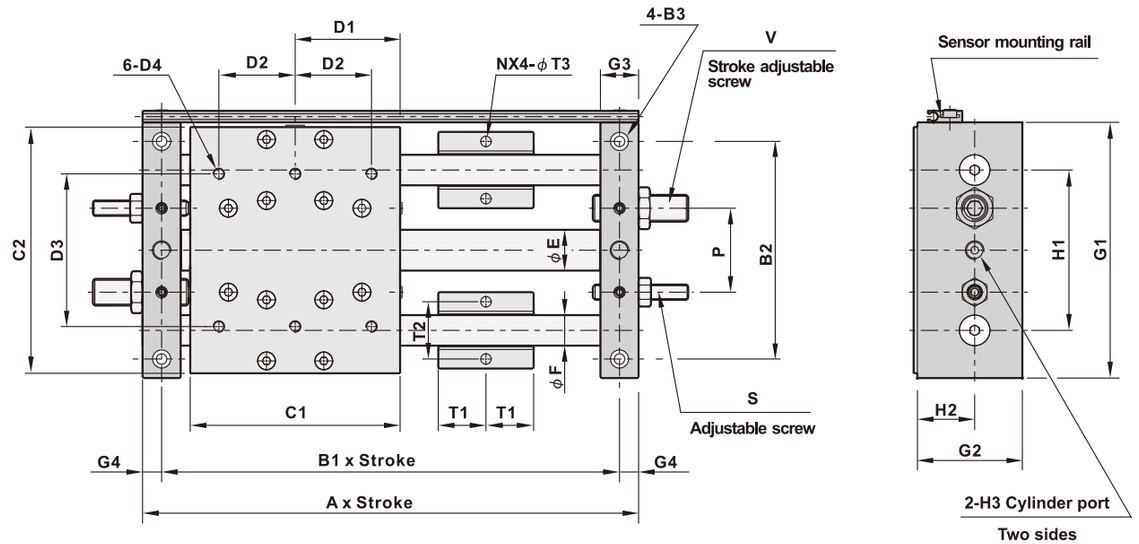

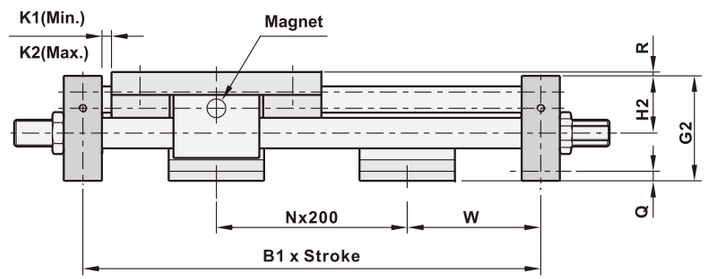

Stroke	500	1000	1500
N	2	5	7
W	120	70	120

(Unit: mm)

Bore size	A	B1	B2	B3	C1	C2	D1	D2	D3	D4	E	F	G1	G2	G3
Ø20	160	140	114	φ5.2-φ9.5x5.5dp	110	129	55	40	80	M5xP0.8x15dp	21.4	16	134	55	20
Ø25	160	140	124	φ5.2-φ9.5x5.5dp	110	139	55	40	100	M5xP0.8x15dp	26.4	16	144	64	20

Bore size	G4	H1	H2	H3	K1	K2	P	Q	R	S	T1	T2	T3	V
Ø20	10	84	30	PT 1/8	5	25	44	5	2	M8xP1.25xL50	25	30	5.5	M14xP1.5xL50
Ø25	10	94	35	PT 1/8	5	25	54	5	2	M8xP1.25xL50	25	30	5.5	M14xP1.5xL50

Rodless Magnetic Cylinder

Material of parts

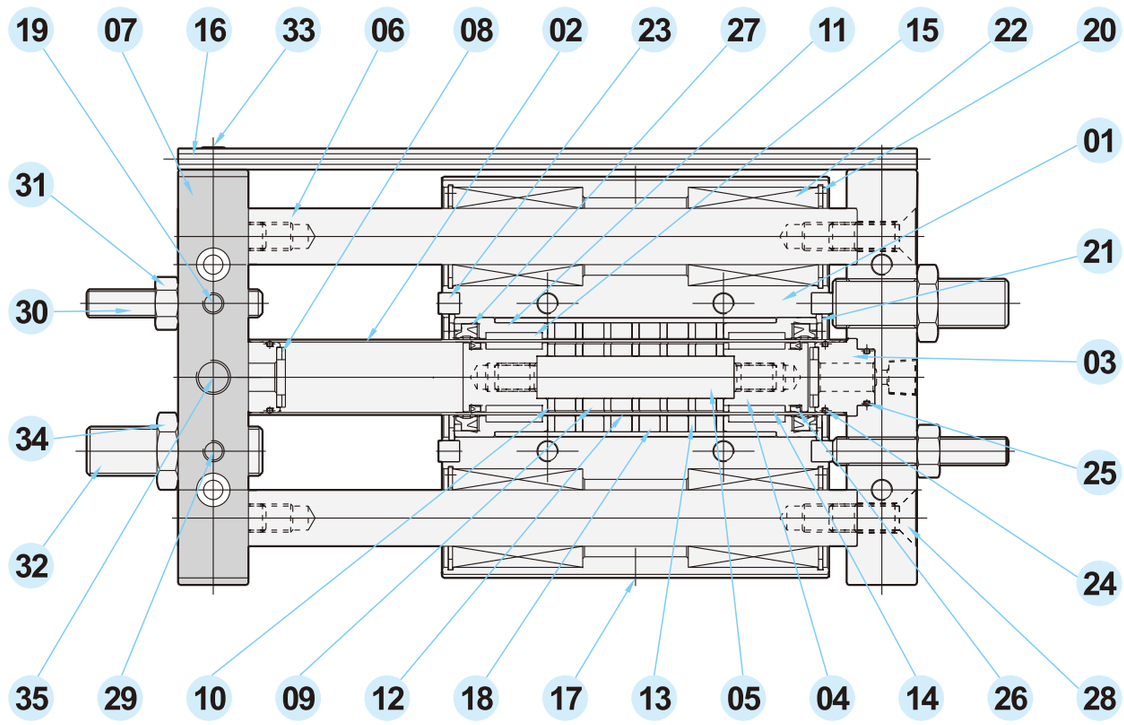

No.	Description	Material	Qty.	No.	Description	Material	Qty.
1	Cylinder body	Aluminum alloy	1	19	Press unit	Industrial plastic	4
2	Piston rod	Stainless steel	1	20	Snap ring	Spring steel	4
3	Top cover	Aluminum alloy	2	21	Snap ring	Spring steel	2
4	Piston	Aluminum alloy	2	22	Linear bearing	Bearing steel	4
5	Center rod	Stainless steel	1	23	Stopper	Bearing steel	4
6	Guide rod	Bearing steel	2	24	O-ring	NBR	2
7	Front plate	Aluminum alloy	2	25	O-ring	NBR	2
8	Bumper	NBR	2	26	Piston packing	NBR	2
9	Piston magnet	Ferrite magnet	6	27	Rod packing	NBR	2
10	Piston magnet holder	Ferrite	7	28	Fixing screw	Carbon steel	4
11	Body end cover	Aluminum alloy	2	29	Socket screw	Carbon steel	4
12	Magnet tube	Aluminum alloy	1	30	Adjustable screw	Carbon steel	2
13	Body magnet holder	Ferrite	7	31	Nut	Carbon steel	2
14	Piston wear ring	Teflon	2	32	Adjustable screw	Carbon steel	2
15	Wear ring cover	Teflon	2	33	Fixing screw	Carbon steel	2
16	Sensor mounting rail	Aluminum	1	34	Nut	Carbon steel	2
17	Magnet	Ferrite magnet	1	35	Bolt	Carbon steel	2
18	Outside magnet	Ferrite magnet	6				

Theoretical force

Bore size	Piston area cm²	Operating pressure kgf/cm²					
		2	3	4	5	6	7
Ø20	3.14	6.28	9.42	12.56	15.7	18.84	21.98
Ø25	4.91	9.82	14.73	19.64	24.55	29.46	34.37
Ø32	8.04	16.08	24.12	32.16	40.2	48.24	56.28

Allowable loads

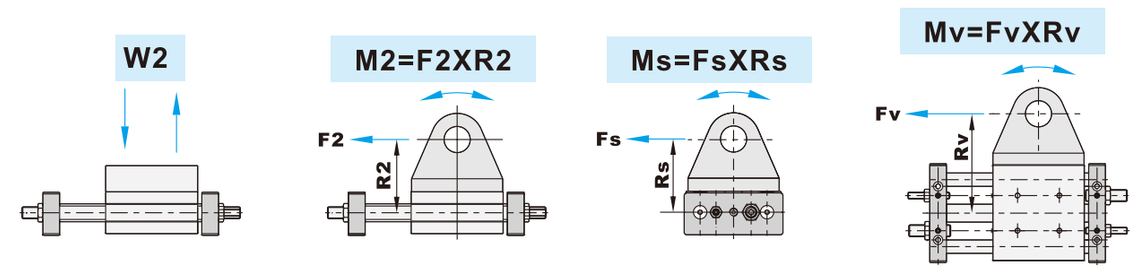

Bore size	Load W2(kgf-cm)	Load M2(kgf-cm)	Load Ms(kgf-cm)	Load Mv(kgf-cm)
Ø20	13	55	11	55
Ø25	20	100	20	100
Ø32	32	160	32	160

Stroke table

Model	Bore size	Standard stroke(mm)
RCP, RCG	Ø20, Ø25	100 ~ 600
	Ø32	200 ~ 1000
RCH	Ø20, Ø25	500 ~ 1500

Mounting example

RCP(Mono-block type)

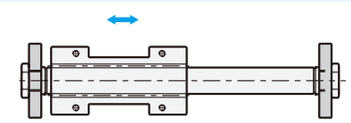

A type foot mounting

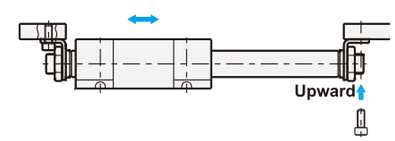

RCH(Mono-block with supporting type)

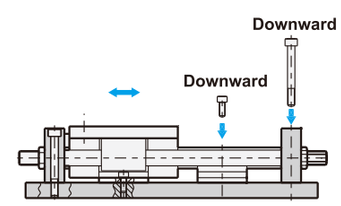

RCG(Guide type)

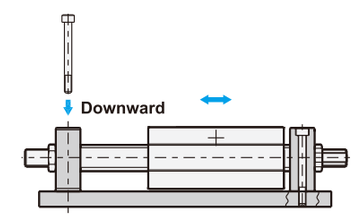

Z Series Rodless Pneumatic Cylinder

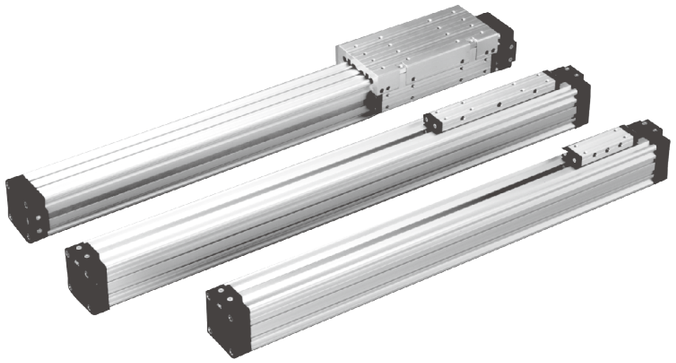

How to order

ZF	32	B50	FB	SQ	D	1
Rodless pneumatic cylinder	Bore size	Stroke	Accessories	Sensor	Type	Number of sensor
ZS :Standard type **ZF** :Guiding type **ZK**:Short type	**18** :Ø18 **25** :Ø25 **32** :Ø32 **40** :Ø40 **50** :Ø50 **63** :Ø63		**Blank** :W/O accessories **FB** :Mounting bracket **MB** :Middle support **AST** :Stop adjustment (shiftable) **ASF** :Stop adjustment (fix)	**Blank** :W/O sensor **SQ** :Square type 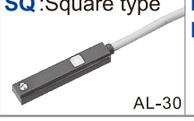 AL-30	**Blank** :Reed switch **D**:NPN **E** :PNP	1 pc 2 pcs

*Sensor please refer to P3-194
*Repair kit to P3-167
*Accessories to P3-166,3-167

Stroke table

Bore size	Standard stroke (mm)
Ø18 ~ Ø63	50 ~ 6000

Specifications

Bore size	Ø18	Ø25	Ø32	Ø40	Ø50	Ø63
Port size	M5	G1/8"		G1/4"		G3/8"
Carrying force	140N	270N	440N	680N	1060N	1680N
Cushioning	15mm	18mm	24mm	34mm	40mm	49mm
Cushion	Adjustable					
Stroke	Variable up to 6000mm, option for longer than 6000mm					
Acting	Double acting					
Fluid	Filtered compressed air without lubricant, or slightly lubricated only					
Operating pressure range	2 ~ 8 kgf/cm²					
Max operating pressure	8 kgf/cm²					
Lubrication	Not required or few					
Barrel material	Aluminum alloy					
Magnet	Built-in					
Ambient temperature	-20℃ ~ 80℃					
Piston speed	2000mm/Sec(Max)					
Weight of ZS carriage	0.3kg	0.6kg	1.1kg	1.8kg	3.2kg	5.6kg
Weight of ZK carriage	0.2kg	0.4kg	0.7kg	1.2kg	2.0kg	3.2kg
Weight of ZF carriage	0.4kg	0.9kg	1.5kg	2.8kg	4.9kg	8.0kg
Weight of stroke 1000mm barrel	1.5kg	2.6kg	4.8kg	6kg	7.4kg	10kg

Model	Summary	Order
ZS 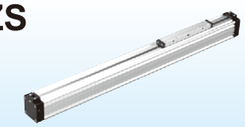	**ZS Standard cylinder** With identical fitting length as existing cylinders without piston. 0-stroke compatible.	Standard
ZF 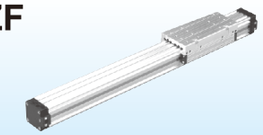	**ZF Guiding cylinder** With external and adjustable slide guide. For high loads.	Standard
ZK	**ZK Short cylinder** With extremely shortened fitting length. 0-stroke up to 42% shorter.	Standard
ZFF 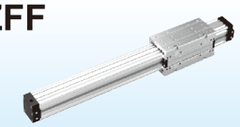	**ZFF Guiding cylinder** With external and adjustable slide guide. For high loads.	Option
ZFK 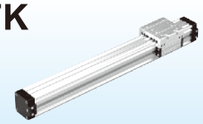	**ZFK Guiding cylinder** With external and adjustable slide guide. For high loads.	Option
ZP 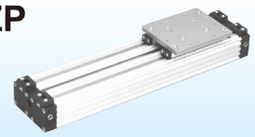	**ZP Parallel cylinder** For high loads and movements in every direction double action force central port.	Option
ZG 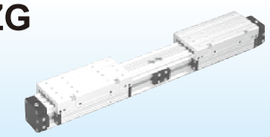	**ZG Gripping cylinder** Gripping and clamping functions. Opening & closing function.	Option
ZT 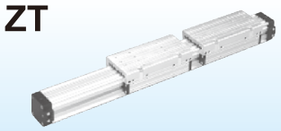	**ZT Tandem cylinder** For high movements in longitudinal direction.	Option
ZD 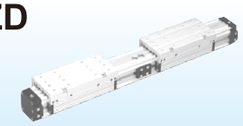	**ZD Double action cylinder** Double action force pressing, embossing, punching...etc.	Option

Rodless Pneumatic Cylinder

Z Series

ZS Standard Cylinder

Features

1. High-strength aluminum-extruded section to reduce deflection and increase the slot width.
2. Front and side wipers on the yoke.
3. Grooves in tube profile for fixing various additional components.
4. Fixation at the front can be turned by 4 x 90°.
5. New pin type cushioning.
6. Large clamping surface on the yoke.
7. Guiding over the entire stroke length.
8. One-side connections possible.
9. Torsion-proof.
10. Exchangeable wear parts.
11. High section modulus in all load directions.
12. Adjustable slide guides save additional guiding systems.
13. Carriage can be installed at a later date.

Dimensions

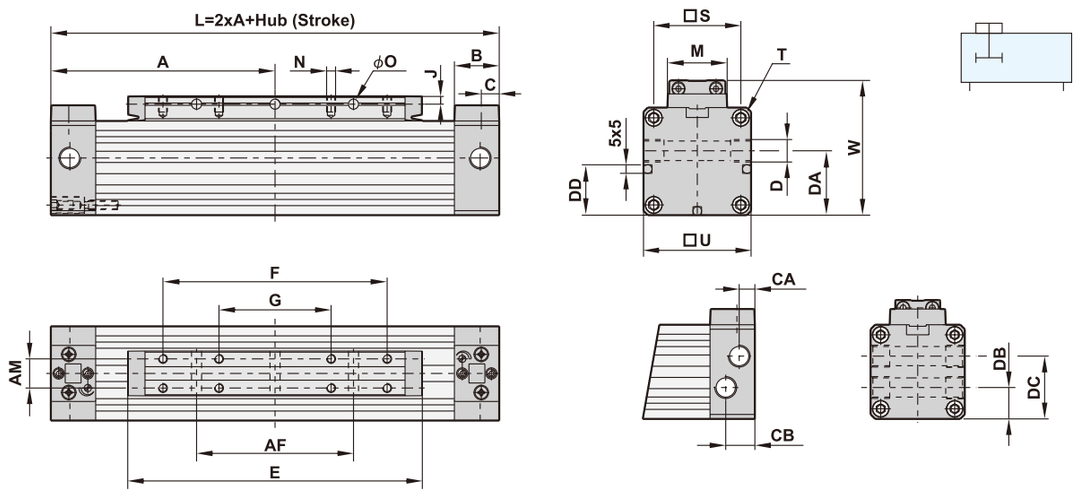

(Unit: mm)

Bore size	A	AF	AM	B	C	CA	CB	D	DA	DB	DC	DD
ϕ18	80	50	10	16.5	6.5	–	–	M7x1/6	15.5	–	–	–
ϕ25	100	70	13	20	8.5	7	13	G1/8x8	25.5	14	28	18.5
ϕ32	120	100	16	20	8.5	7	13	G1/8x8	32	16	34.5	21
ϕ40	150	140	22	23	13	11	14.5	G1/4x12	37.5	18.5	41	29.5
ϕ50	180	180	29	23	13	12	14	G1/4x12	47.5	22.5	47.5	37
ϕ63	215	230	40	29	13	12.5	15.5	G3/8x12	59.5	24.5	59.5	44.5

Bore size	E	F	G	J	M	N	O	S	T	U	W
ϕ18	103	75	–	3	15.5	M3x6	3.5	23.5	M3x7	30	39
ϕ25	131	100	50	3.5	20	M4x7	4.5	33	M4x9	42	53
ϕ32	171	140	70	4.5	25	M5x9	5.5	41	M5x10	52	65
ϕ40	220	180	90	5	33	M6x10	7	51	M6x12	63	79
ϕ50	280	220	110	6.5	42	M8x12.5	7	63	M8x12	78	96
ϕ63	333	280	140	8	54	M8x15	9	78	M8x12	93	113.5

ZF Guiding Cylinder

Features

1. Accuracy and high loading capacity.
2. The cylinder provides V-guide grooves on outer side which support the guide carriage by means of slide bars, the guide carriage is fitted to the sides of the cylinder tube, which means that the increase of the sloth width has no influence and can almost be adjusted without backlash.
3. As the guide grooves are integrated into the cylinder tube,the generally complicated and expensive installation of additional guide profiles is eliminated.
4. The adjustable slide bars are made of high-strength plastic. In combination with the anodized surface of the cylinder, these plastic gibes ensure a very favorable sliding effect.
5. Exceptionally compact and space saving.
6. Suitable for lower end supports, center supports, solenoid switch systems.
7. Utilizing cross supports, two guiding cylinders can be connected to form portal support systems with infinitely chosen stroke, which is applicable to variety of applications.
8. Provide highly versatile linear drive element which allows all designers and machine makers to implement future-oriented concepts at reasonable prices.

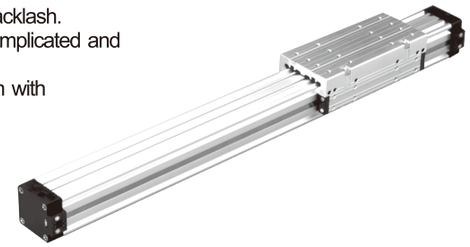

Dimensions

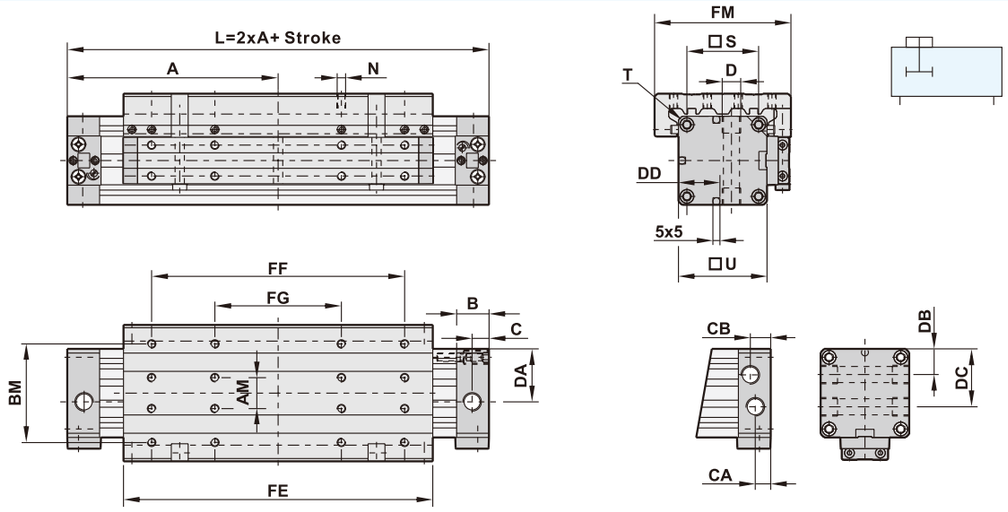

(Unit: mm)

Bore size	A	AM	B	BM	C	CA	CB	D	DA	DB	DC
ϕ18	80	10	16.5	35	6.5	–	–	M7x1/6	17.5	–	–
ϕ25	100	13	20	45	8.5	7	13	G1/8x8	25.5	14	28
ϕ32	120	16	20	55	8.5	7	13	G1/8x8	32	17.5	34.5
ϕ40	150	22	23	70	13	9.5	14.5	G1/4x12	37.5	20	42
ϕ50	180	29	23	85	13	9.5	14	G1/4x12	47.5	26	52
ϕ63	215	40	29	105	13	11	18.5	G3/8x12	59.5	30	62

Bore size	DD	FE	FF	FG	FM	FW	N	S	T	U
ϕ18	–	103	75	–	50	39	M4x7.5	23.5	M3x7	30
ϕ25	18.5	131	100	50	66	53	M4x8	33	M4x9	42
ϕ32	21	171	140	70	80	65	M5x10	41	M5x10	52
ϕ40	29.5	220	180	90	97	79	M6x12	51	M6x12	63
ϕ50	37	280	220	110	116	96	M8x16	63	M8x12	78
ϕ63	44.5	333	280	140	136	113.5	M8x16	78	M8x12	93

Rodless Pneumatic Cylinder

Z Series

ZK Standard Cylinder

Features

1. Basic length (0-stroke) up to 42% shorter.
2. Space-saving also in comparison to short-stroke standard cylinders with piston rod.
3. Shorter total fitting length.
4. Money-saving compact construction.

Dimensions

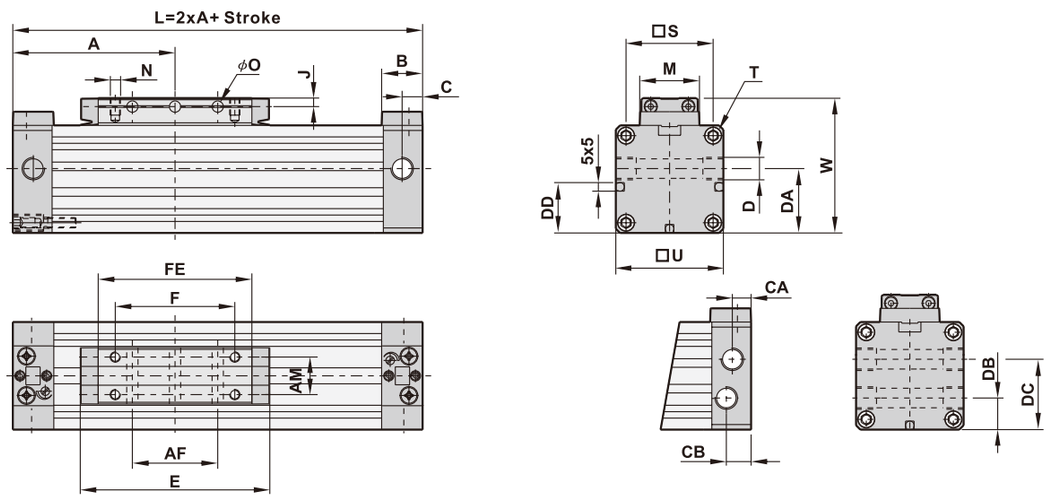

(Unit: mm)

Bore size	A	AF	AM	B	C	CA	CB	D	DA	DB	DC	DD	E
φ18	57.5	15	10	16.5	6.5	–	–	M7x1/6	17.5	–	–	–	58
φ25	67.5	19	13	20	8.5	7	13	G1/8x8	25.5	14	28	18.5	66
φ32	77.5	35	16	20	8.5	7	13	G1/8x8	32	17.5	34.5	21	86
φ40	95	50	22	23	13	9.5	14.5	G1/4x12	37.5	20	42	29.5	110
φ50	105	46	29	23	13	9.5	14.5	G1/4x12	47.5	26	52	37	130
φ63	125	70	40	29	13	11	18.5	G3/8x12.5	59.5	30	62	44.5	153

Bore size	F	FE	J	M	N	O	S	T	U	W
φ18	30	45	3	15.5	M3x6	3.5	23.5	M3x7	30	39
φ25	35	51	3.5	20	M4x7	4.5	33	M4x9	42	53
φ32	55	73	4.5	25	M5x9	5.5	41	M5x10	52	65
φ40	70	92	5	33	M6x10	7	51	M6x12	63	79
φ50	70	101	6.5	42	M8x12.5	7	63	M8x12	78	96
φ63	100	130	8	54	M8x15	9	78	M8x12	93	113.5

Dimension of mounting parts

FB Mounting bracket

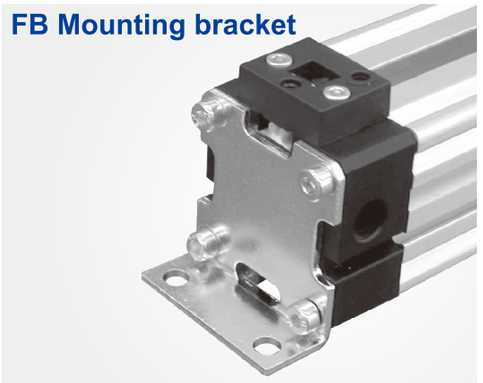

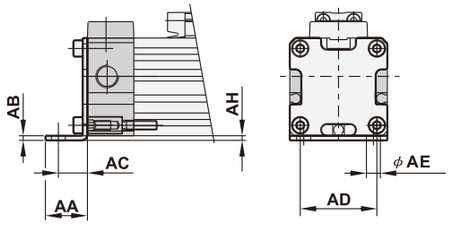

(Unit: mm)

Bore size	Order code	AA	AB	AC	AD	AE	AH
φ18	1182-0001	15	2	10	20	6	2
φ25	1252-0001	18	2	12.5	30	6	2
φ32	1322-0001	20	2.5	13.5	40	7	3
φ40	1402-0001	30	3	17.5	50	9	3.5
φ50	1502-0001	28	3	20	60	9	3
φ63	1632-0001	30	3	21	75	11	4.5

MB Middle support

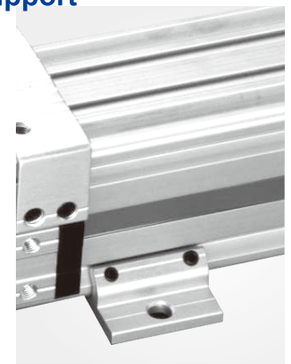

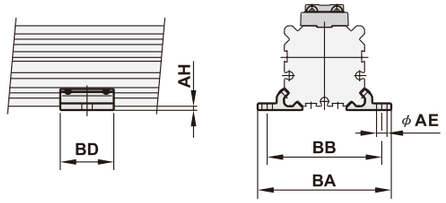

(Unit: mm)

Bore size	Order code	AE	AH	BA	BB	BC	BD	BE	BF
φ18	1183-0001	6	2	56	46	36.5	23	2.5	8.25
φ25	1253-0001	6	2	70	60	50	28	3.5	11
φ32	1323-0001	7	3	85	73	61.5	33	4	13.8
φ40	1403-0001	9	3	105	90	75	38	4.5	16
φ50	1503-0001	9	3	122	106	91	43	5	19
φ63	1633-0001	11	4.5	144	125	107	48	6	22

Mounting example for MB middle support

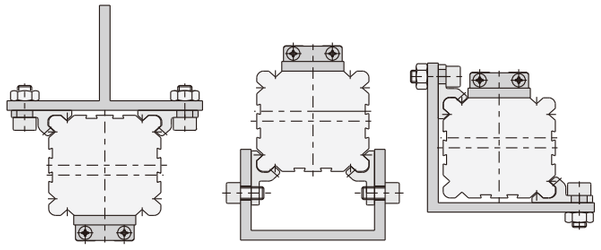

Deflection diagram

When using very long cylinders or applying heavy loads, the tube deflection is to be taken into consideration . One or more middle supports are to be used according to the admissible deflection.
Example:
A cylinder φ25 should deflect by a maximum of 0.5mm when applying a force FZ of 500N. According to the diagram the cylinder can be 750mm long. Longer cylinders must have a middle support.
Other possibilities
In case very long cylinders are installed without supports, and additional profile can be used as a support.
Examples: all versions with middle support and standard profiles.

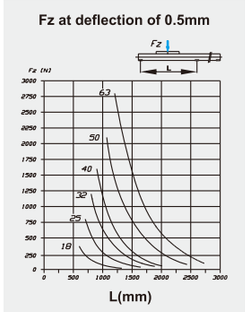

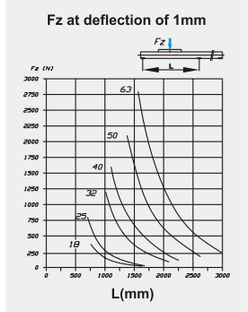

AS Stop adjustment

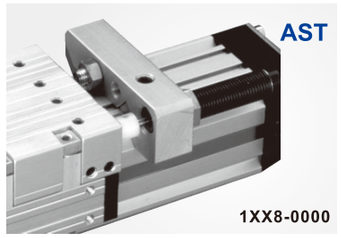

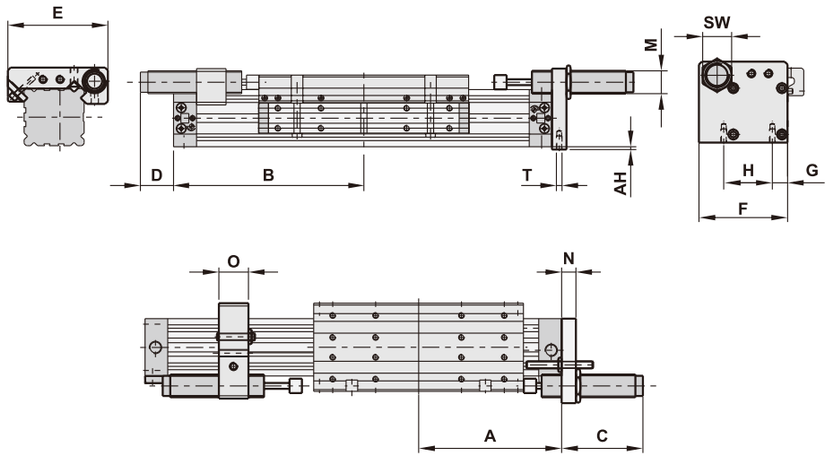

(Unit: mm)

Bore size	Order code		A		B			C	D	E	F	G	H	M	N	O	SW	T	Shock absorber
			ZF	ZFK	AH	ZF	ZFK												
ϕ18	1188-0000	1188-0001	80	57.5	2	113	90.5	32	Max25	57	43.5	8	23.5	M10x1.0	8	15	13	M3x10	DA1008-HP
ϕ25	1258-0000	1258-0001	100	67.5	2	117.5	85	37	Max40	72	57	12.5	33	M14x1.5	10	20	17	M4x10	DA1415-HP
ϕ32	1328-0000	1328-0001	120	77.5	3	135.5	90	70	Max30	84	70	14.5	41	M14x1.5	12	20	17	M5x12	DA1415-HP
ϕ40	1408-0000	1408-0001	150	95	3	165	110	65	Max50	105	93	16	51	M25x1.5	15	30	32	M6x15	DA2525-HP
ϕ50	1508-0000	1508-0001	180	105	3	195	140	80	Max65	126	102	22.5	63	M25x1.5	15	30	32	M8x20	DA2525-HP
ϕ63	1638-0000	1638-0001	215	125	4.5	250	160	80	65	140	118.5	20	78	M25x1.5	15	40	32	M8x20	DA2525-HP

Shock absorber is available in case of enquiry.

Repair kits

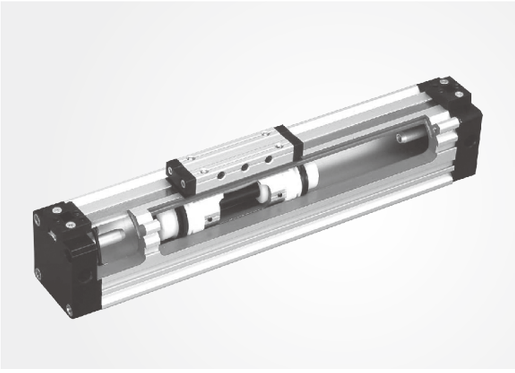

Bore size	ZS	ZK	ZF
ϕ18	ZS-1189-0000-□□□□	ZS-2189-0000-□□□□	ZS-3189-0000-□□□□
ϕ25	ZS-1259-0000-□□□□	ZS-2259-0000-□□□□	ZS-3259-0000-□□□□
ϕ32	ZS-1329-0000-□□□□	ZS-2329-0000-□□□□	ZS-3329-0000-□□□□
ϕ40	ZS-1409-0000-□□□□	ZS-2409-0000-□□□□	ZS-3409-0000-□□□□
ϕ50	ZS-1509-0000-□□□□	ZS-2509-0000-□□□□	ZS-3509-0000-□□□□
ϕ63	ZS-1639-0000-□□□□	ZS-2639-0000-□□□□	ZS-3639-0000-□□□□

How to order

ZS – 1189-0000 – 0100

ZS Standard cylinder	Bore size	Stroke
	ϕ18 ϕ40 ϕ25 ϕ50 ϕ32 ϕ63	

Details included

No.	Description	Qty.
1	Round profile/m	1
2	Sealing strip/m	1
3	Cover strip(Steel)/m	1
4	Head wiper	2
5	Wiper	2
6	Guiding bar	2
7	Piston seal	2
8	Cushion ring	2
9	End cap O-ring	2
10	Cushion pin O-ring	2
11	Cylinder head screw plain ISO4762	4

Loads

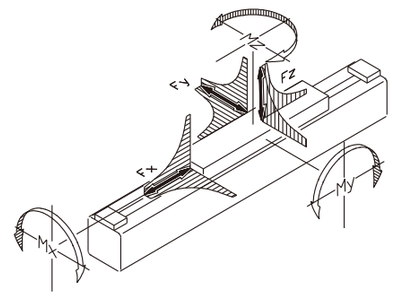

$$\Sigma F = Fzul = \sqrt{Fx^2 + Fy^2 + Fz^2}$$

Note:
All data concerning forces and torques refer to a speed of V<0.35m/s.
Observation keeping the indicated values ensures maximum service life, minimum noise and optimum noise and optimum operating results.
Higher speeds reduce the admissible forces.

ZS Standard cylinder

Piston	Vmax ≤ 0.35m/s			Admissible loading force (Fzul)			Torques		
	Fx(N) Acting force of 6 bar	Fy(N)	Fz(N)	0.75 m/s	1 m/s	1.5 m/s	Mx(Nm) Fy/Fz	My(Nm) Fx/Fz	Mz(Nm) Fx/Fy
ϕ18	140	80	300	80	40	20	1	3	3
ϕ25	270	110	480	155	90	40	2	13	13
ϕ32	440	165	650	280	155	70	3.5	25	25
ϕ40	680	225	800	500	290	125	5.5	40	40
ϕ50	1060	325	1060	790	420	195	10	65	65
ϕ63	1680	435	1680	1500	850	370	16	100	100

ZK Short cylinder

Piston	Vmax ≤ 0.35m/s			Admissible loading force (Fzul)			Torques		
	Fx(N) Acting force of 6 bar	Fy(N)	Fz(N)	0.75 m/s	1 m/s	1.5 m/s	Mx(Nm) Fy/Fz	My(Nm) Fx/Fz	Mz(Nm) Fx/Fy
ϕ18	140	40	300	80	40	20	0.4	0.7	0.7
ϕ25	270	55	230	90	50	25	0.7	2.7	2.7
ϕ32	440	70	320	200	110	45	1	5	5
ϕ40	680	100	400	420	240	110	2	8.5	8.5
ϕ50	1060	140	480	750	440	190	3.5	13	13
ϕ63	1680	180	590	1500	850	380	50	18	18

ZF Guiding cylinder

Piston	Vmax ≤ 0.35m/s			Admissible loading force (Fzul)			Torques		
	Fx(N) Acting force of 6 bar	Fy(N)	Fz(N)	0.75 m/s	1 m/s	1.5 m/s	Mx(Nm) Fy/Fz	My(Nm) Fx/Fz	Mz(Nm) Fx/Fy
ϕ18	140	370	370	100	58	26	3.5	6	6
ϕ25	270	800	800	280	160	65	10	20	20
ϕ32	440	200	200	510	300	140	25	45	45
ϕ40	680	1600	1600	1000	550	250	40	75	75
ϕ50	1060	2100	2100	1500	850	380	80	150	150
ϕ63	1680	2800	2800	2500	1400	610	110	250	250

Controls

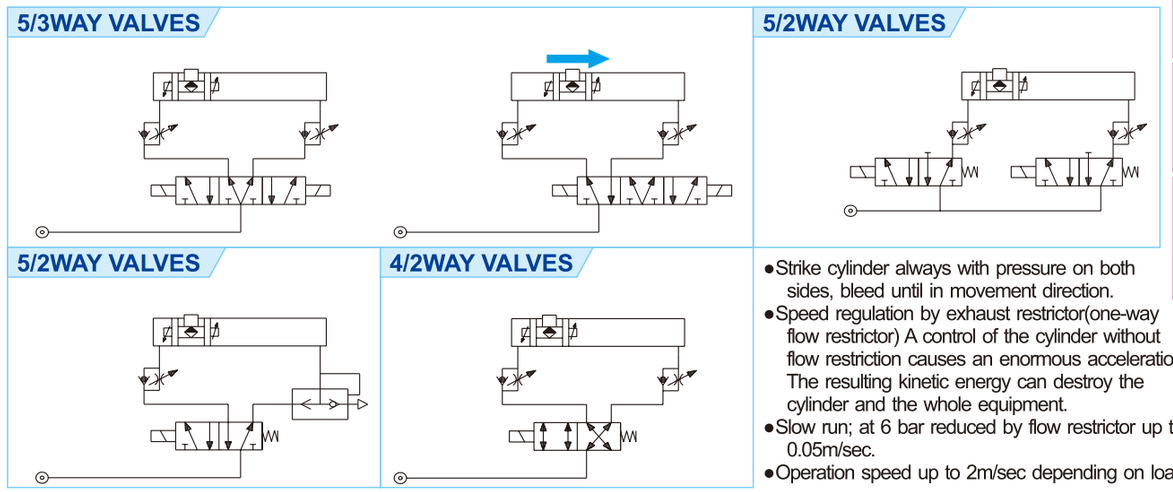

- Strike cylinder always with pressure on both sides, bleed until in movement direction.
- Speed regulation by exhaust restrictor(one-way flow restrictor) A control of the cylinder without flow restriction causes an enormous acceleration. The resulting kinetic energy can destroy the cylinder and the whole equipment.
- Slow run; at 6 bar reduced by flow restrictor up to 0.05m/sec.
- Operation speed up to 2m/sec depending on loads.

Material of parts

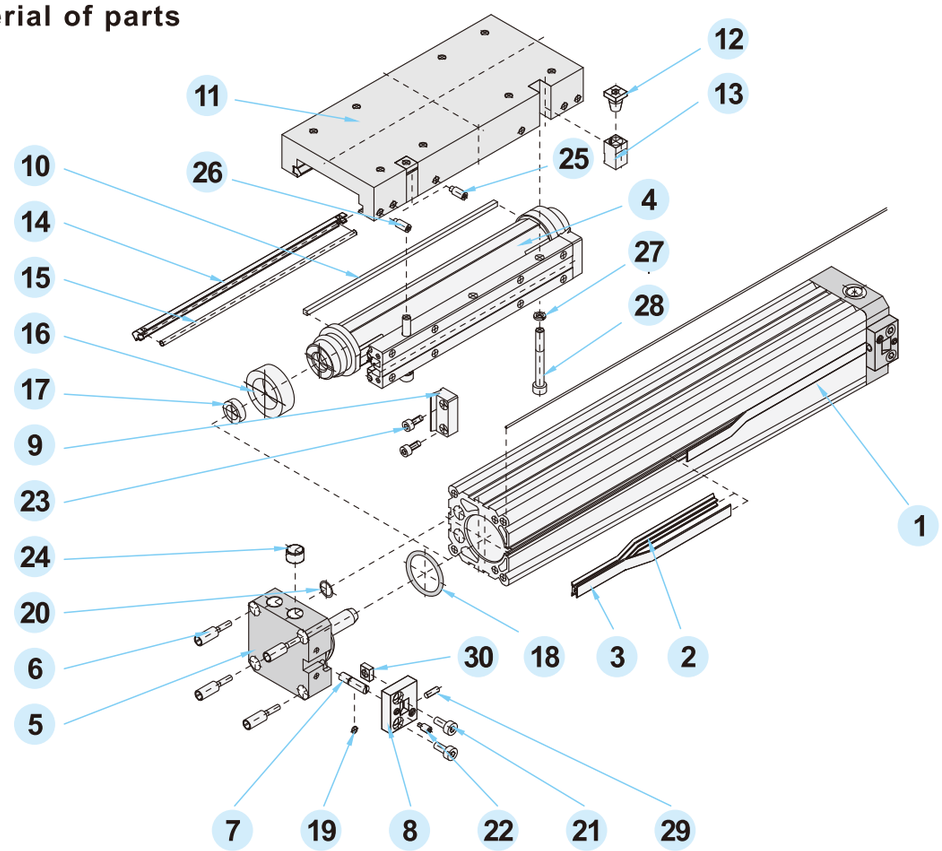

No.	Description	Material	No.	Description	Material
1	Tube	Al anodized	16	Piston seal	PU
2	Sealing strip	PU	17	Cushion ring	NBR
3	Cover strip	Stainless steel	18	O-ring	NBR
4	Yoke	Al anodized/POM	19	O-ring	NBR
5	End cap	Al anodized	20	Flat seal	NBR
6	Special screw	Zinc-plated steel	21	Countersink screw	Zinc-plated steel
7	Cushioning pin	Stainless steel	22	Grub screw with pin	Zinc-plated steel
8	Strip cover	POM	23	Cylinder head screw	Zinc-plated steel
9	Head wiper	POM	24	Plug screw	Zinc-plated steel
10	Wiper	POM	25	Grub screw	Browned steel
11	Carriage	Al anodized	26	Grub screw with pin	Browned steel
12	Cone nut	Zinc-plated steel	27	Plain washer	Zinc-plated steel
13	Clamp wedge	Al anodized	28	Cylinder head screw	Zinc-plated steel
14	Guiding bar	POM	29	Grub screw	Browned steel
15	Press bar	Stainless steel	30	Square nut	Zinc-plated steel

Memo...

www.shako.com.tw

Safety Notice & Caution For Booting Systems

1. The power source of boosting system is dry compressed air after filtration (40 micron), the pressure range is about 2-7kgf/cm².
2. For stable air pressure, air tank installed between FRL and boosting system is suggested to reach the best performance of force.
3. Ambient temperature for boosting system is -5~+60℃, please inform your sales representative if your working environment needs special temperature or conditions.
4. For the best air quality, FRL with auto drain is suggested.
5. For the selection of cycle oil, ISO VG32 or ISO VG68 is suggested, and the selection of cycle oil depends on the model of boosting cylinder you purchase. Please follow the specifications on catalogue.
6. It is suggested to install a pressure regulator with check valve on the inlet of working stroke on boosting cylinder to adjust requested output pressure. This is to avoid unnecessary working force causing the waste of energy, the short life for mold and material wearing.
7. The normal installation of boosting cylinder is by flange mounting and the direction is vertical with piston rod downward.
8. The booster installed at higher point than hydraulic cylinder is suggested. If there is a problem for such installation, please contact your sales for other solutions.

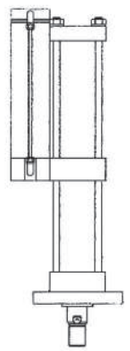

Pic.1

Normally vertical installation with piston rod downward.

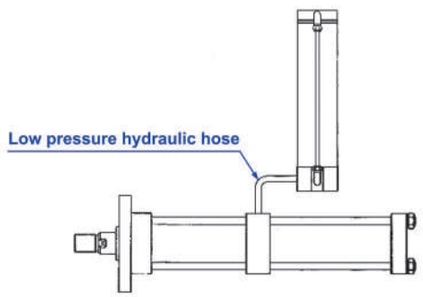

Pic.2

Parallel installation connected to vertical air-hydro converter

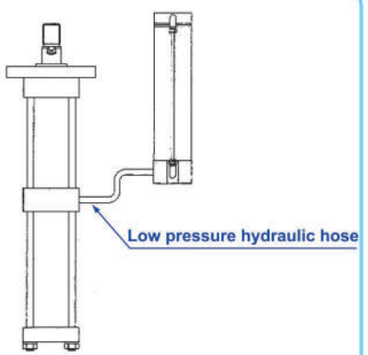

Pic.3

Vertical installation with piston rod upward connected to vertical air-hydro converter.

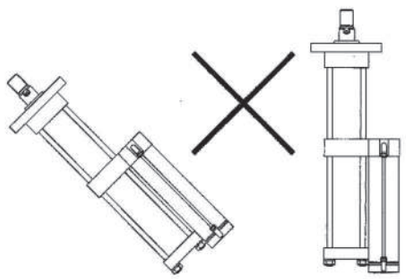

Pic.4

Parallel and leaning installation without vertical air-hydro converter at higher point than boosting cylinder like Pic.3 shown is prohibited.

SMPT Series Boosting Cylinder

Standard Type

Features

1. Utilize pneumatic system to generate big force without hydraulic system.
2. Easy to set up, adjust and maintain.
3. Can achiece the sam high pressure.
4. Power source is easy to obtained and more economic.
5. Operation with little noise.
6. Without hight-temp, problem caused by hydraulic cylinder.

How to order

SMPT –	1T –	50 –	5
Boosting cylinder (standard type)	Total output (T)/Bore size	Total stroke	Working stroke
	1T : Ø63	50 : 50mm	5 : 5mm
	3T : Ø63	100 : 100mm	10 : 10mm
	5T : Ø80	150 : 150mm	15 : 15mm
	8T : Ø80	200 : 200mm	20 : 20mm
	10T : Ø100		
	13T : Ø100		
	15T : Ø125		
	20T : Ø125		
	30T : Ø150		
	40T : Ø150		

Specifications

Moder	SMPT
Working motion	Double motion
Working pressure	2 ~ 7 kgf/cm² Dry compress air after filtering
Cycle oil	ISO VG 68
Working Temperature	-5℃ ~ +60℃ (Other working tempertures shall be on requested)
Operation speed	50-700mm/s
Oil cylinder assure pressure	300 kgf/cm²
Air cylinder assure pressure	15 kgf/cm²
Stroke difference	+1.0mm 0
Working frequency	10 times/min (About 30 times/min. Under 5T)

SMPT Series Boosting Cylinder

Standard Type

Dimensions

SMPT-1T

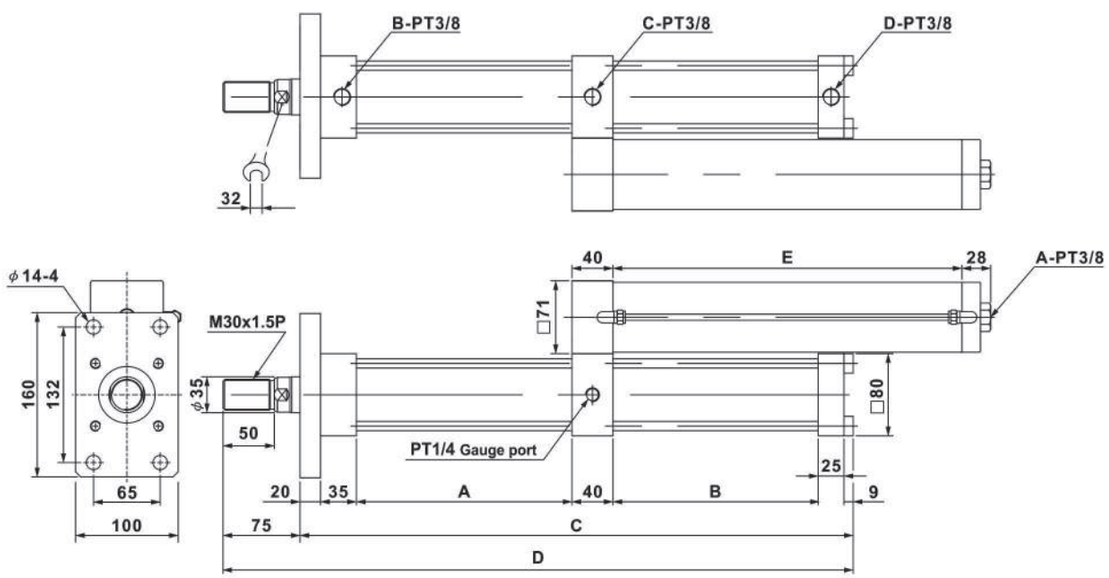

(Unit: mm)

Total stroke	Boosting stroke	A	B	C	D	E
50	5	110	105	345	420	240
100	5	160	105	395	470	300
150	5	210	105	445	520	340
200	5	260	105	495	570	380
50	10	110	155	395	470	240
100	10	160	155	445	520	300
150	10	210	155	495	570	340
200	10	260	155	545	620	380

Total stroke	Boosting stroke	A	B	C	D	E
50	15	110	200	440	515	240
100	15	160	200	490	565	300
150	15	210	200	540	615	340
200	15	260	200	590	665	380
50	20	110	250	490	565	240
100	20	160	250	540	615	300
150	20	210	250	590	665	340
200	20	260	250	640	715	380

Theoretical output

Operating pressure	kg/cm²	1	2	3	4	5	6	7
Approach stroke force	kg	30	60	90	120	150	180	210
Working stroke force	kg	300	600	900	1250	1550	1850	1850
Return stroke force	kg	20	40	60	80	100	120	120

Dimensions

SMPT-3T

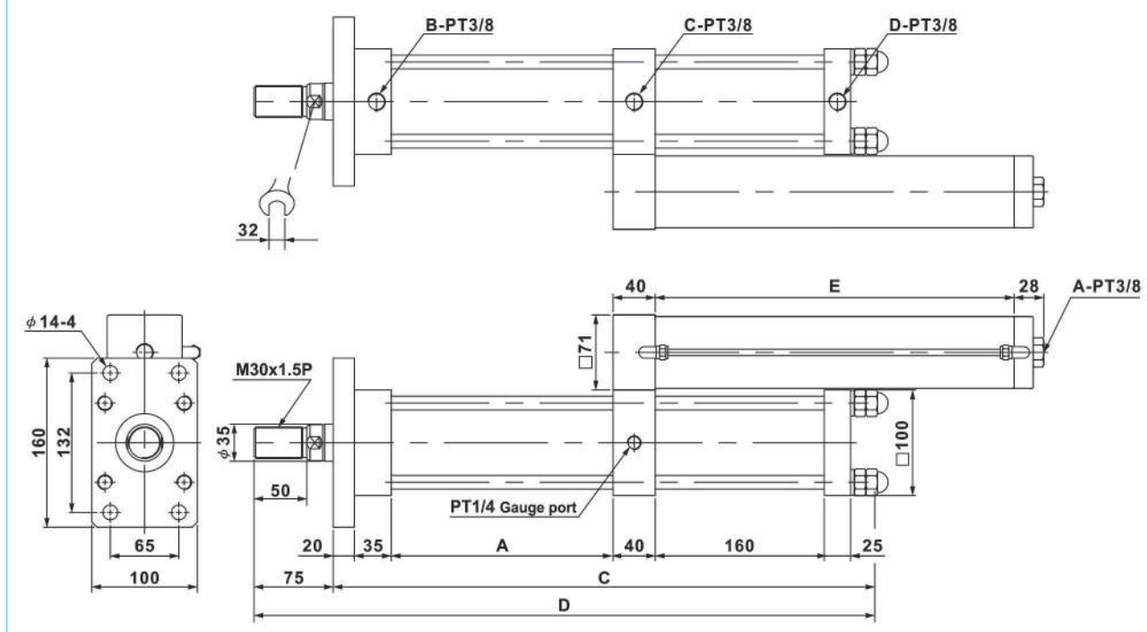

(Unit: mm)

Total stroke	Boosting stroke	A	B	C	D	E
50	5	110	110	355	430	240
100	5	160	110	405	480	300
150	5	210	110	455	530	340
200	5	260	110	505	580	380
50	10	110	160	405	480	240
100	10	160	160	455	530	300
150	10	210	160	505	580	340
200	10	260	160	555	630	380

Total stroke	Boosting stroke	A	B	C	D	E
50	15	110	205	450	525	240
100	15	160	205	500	575	300
150	15	210	205	550	625	340
200	15	260	205	600	675	380
50	20	110	255	500	575	240
100	20	160	255	500	625	300
150	20	210	255	600	675	340
200	20	260	255	650	725	380

Theoretical output

Operating pressure	kg/cm²	1	2	3	4	5	6	7
Approach stroke force	kg	30	60	90	120	150	180	210
Working stroke force	kg	500	1000	1500	2000	2500	3000	3500
Return stroke force	kg	20	40	60	80	100	120	140

Dimensions

SMPT-5T

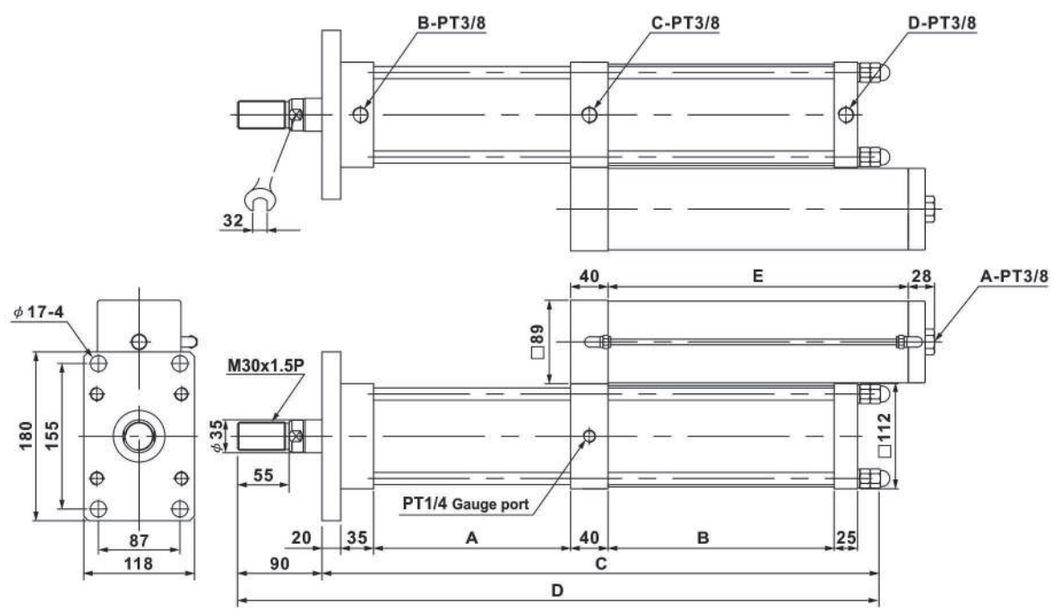

(Unit: mm)

Total stroke	Boosting stroke	A	B	C	D	E	Total stroke	Boosting stroke	A	B	C	D	E
50	5	110	121	366	456	220	50	15	110	241	486	576	220
100	5	160	121	416	506	280	100	15	160	241	536	626	280
150	5	210	121	466	556	320	150	15	210	241	586	676	320
200	5	260	121	516	606	360	200	15	260	241	636	726	360
50	10	110	181	426	516	220	50	20	110	301	596	686	220
100	10	160	181	576	566	280	100	20	160	301	596	686	280
150	10	210	181	526	616	320	150	20	210	301	646	736	320
200	10	260	181	576	666	360	200	20	260	301	696	786	360

Theoretical output

Operating pressure	kg/cm²	1	2	3	4	5	6	7
Approach stroke force	kg	50	100	150	200	250	300	350
Working stroke force	kg	1000	2000	3000	4000	5000	6000	7000
Return stroke force	kg	40	80	120	160	200	240	280

Dimensions

SMPT-8T

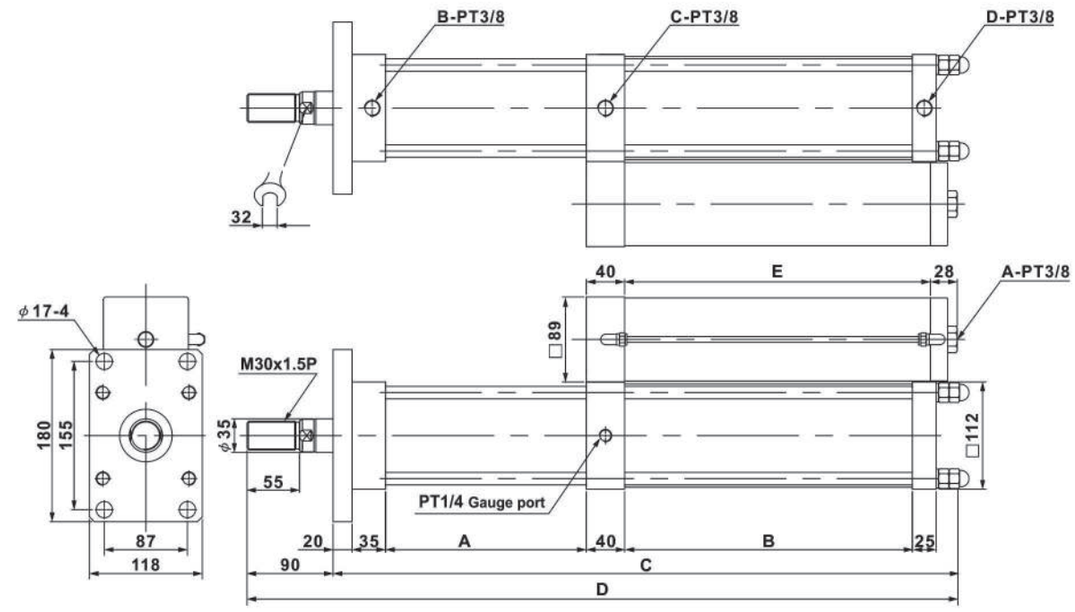

(Unit: mm)

Total stroke	Boosting stroke	A	B	C	D	E	Total stroke	Boosting stroke	A	B	C	D	E
50	5	110	131	376	466	220	50	15	160	301	596	686	220
100	5	160	131	426	576	280	100	15	160	301	596	686	280
150	5	210	131	476	566	320	150	15	210	301	646	736	320
200	5	260	131	526	616	360	200	15	260	301	696	786	360
50	10	110	211	456	546	220	50	20	270	385	790	880	220
100	10	160	211	506	596	280	100	20	260	385	780	870	280
150	10	210	211	556	646	320	150	20	260	385	780	870	320
200	10	260	211	606	696	360	200	20	260	385	780	870	360

Theoretical output

Operating pressure	kg/cm²	1	2	3	4	5	6	7
Approach stroke force	kg	50	100	150	200	250	300	350
Working stroke force	kg	1250	2500	3750	5000	6250	7500	8750
Return stroke force	kg	40	80	120	160	200	240	280

Dimensions

SMPT-10T

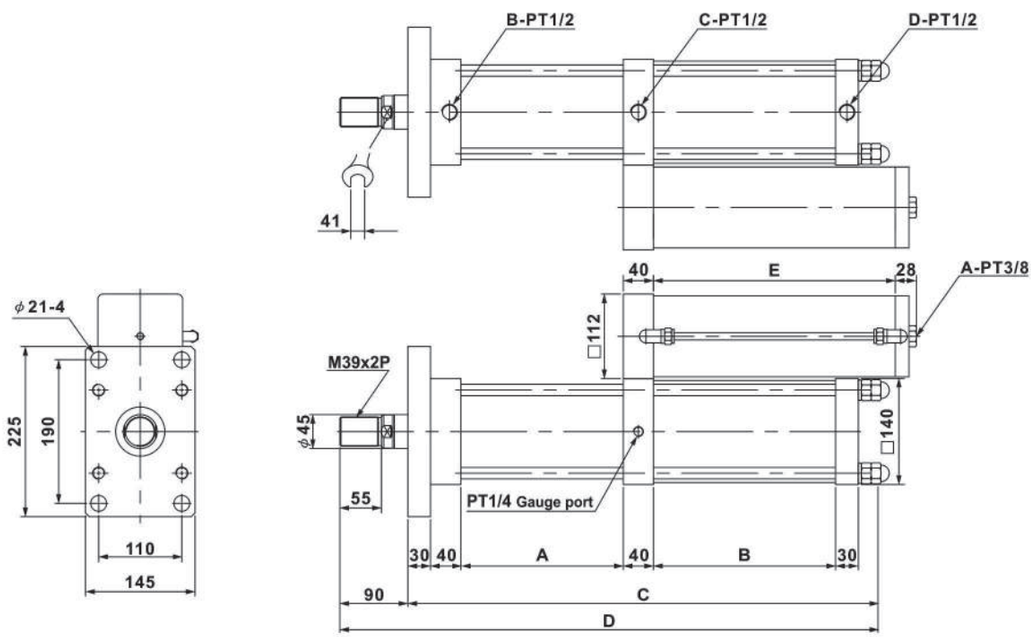

(Unit: mm)

Total stroke	Boosting stroke	A	B	C	D	E	Total stroke	Boosting stroke	A	B	C	D	E
50	5	115	121	402	492	220	50	15	115	241	522	612	220
100	5	165	121	452	542	280	100	15	165	241	572	662	280
150	5	215	121	502	592	320	150	15	215	241	622	712	320
200	5	265	121	552	642	360	200	15	265	241	672	762	360
50	10	115	181	462	552	220	50	20	165	301	582	672	220
100	10	165	181	512	602	280	100	20	165	301	632	722	280
150	10	215	181	562	652	320	150	20	215	301	682	772	320
200	10	265	181	612	702	360	200	20	265	301	732	822	360

Theoretical output

Operating pressure	kg/cm²	1	2	3	4	5	6	7
Approach stroke force	kg	78	156	234	312	390	468	546
Working stroke force	kg	1560	3120	4680	6240	7800	9360	10920
Return stroke force	kg	60	120	180	240	300	360	420

Dimensions

SMPT-13T

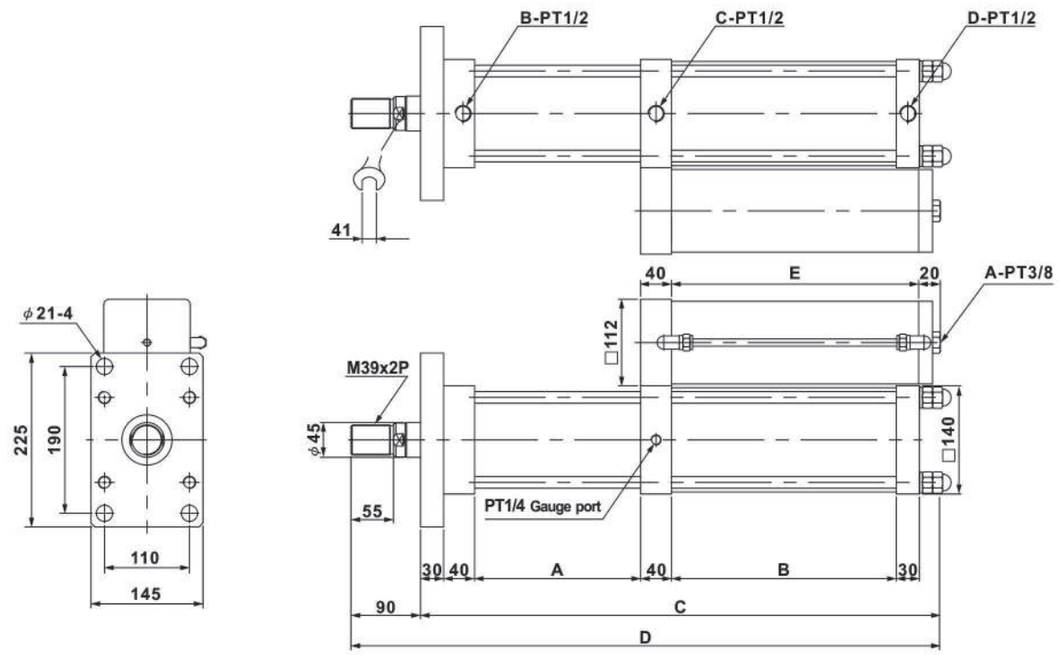

(Unit: mm)

Total stroke	Boosting stroke	A	B	C	D	E	Total stroke	Boosting stroke	A	B	C	D	E
50	5	115	131	412	492	220	50	15	115	291	572	662	220
100	5	165	131	462	552	280	100	15	165	291	622	712	280
150	5	215	131	512	602	320	150	15	215	291	672	762	320
200	5	265	131	562	652	360	200	15	265	291	722	812	360
50	10	115	211	492	582	220	50	20	215	371	752	842	220
100	10	165	211	542	632	280	100	20	215	371	752	842	280
150	10	215	211	592	782	320	150	20	215	371	752	842	320
200	10	265	211	642	732	360	200	20	265	371	802	492	360

Theoretical output

Operating pressure	kg/cm²	1	2	3	4	5	6	7
Approach stroke force	kg	78	156	234	312	390	468	546
Working stroke force	kg	1970	3940	5910	7880	9850	11820	13790
Return stroke force	kg	60	120	180	240	300	360	420

Dimensions

SMPT-15T

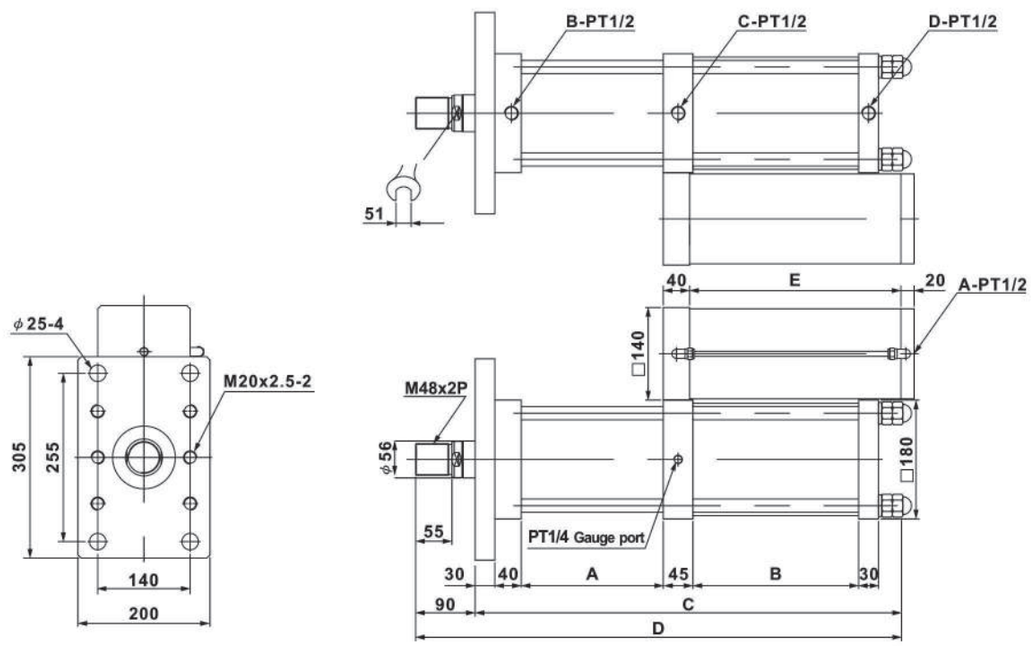

(Unit: mm)

Total stroke	Boosting stroke	A	B	C	D	E
50	5	115	131	426	516	220
100	5	165	131	476	566	280
150	5	215	131	526	602	320
200	5	265	131	576	652	360
50	10	115	191	486	582	220
100	10	165	191	536	632	280
150	10	215	191	586	782	320
200	10	265	191	636	732	360

Total stroke	Boosting stroke	A	B	C	D	E
50	15	115	251	546	636	220
100	15	165	251	596	686	280
150	15	215	251	646	736	320
200	15	265	251	696	786	360
50	20	165	311	656	746	220
100	20	165	311	656	746	280
150	20	215	311	706	796	320
200	20	265	311	756	846	360

Theoretical output

Operating pressure	kg/cm²	1	2	3	4	5	6	7
Approach stroke force	kg	120	240	360	480	600	720	840
Working stroke force	kg	2560	5120	7680	10240	12800	15350	17900
Return stroke force	kg	90	180	270	360	450	540	630

Dimensions

SMPT-20T

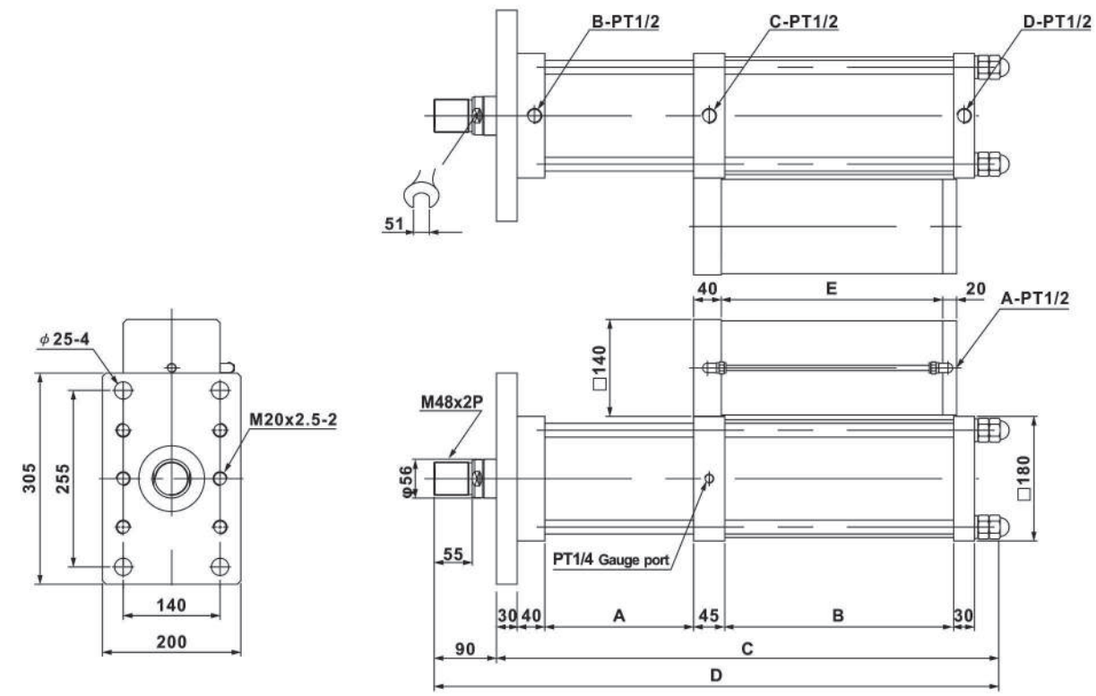

(Unit: mm)

Total stroke	Boosting stroke	A	B	C	D	E
50	5	115	151	446	536	220
100	5	165	151	496	586	280
150	5	215	151	546	636	320
200	5	265	151	596	686	360
50	10	115	241	536	626	220
100	10	165	241	586	676	280
150	10	215	241	636	726	320
200	10	265	241	686	776	360

Total stroke	Boosting stroke	A	B	C	D	E
50	15	165	331	676	766	220
100	15	165	331	676	766	280
150	15	215	331	726	816	320
200	15	265	331	776	866	360
50	20	265	411	856	946	220
100	20	265	411	856	946	280
150	20	215	411	806	896	320
200	20	265	411	856	946	360

Theoretical output

Operating pressure	kg/cm²	1	2	3	4	5	6	7
Approach stroke force	kg	120	240	360	480	600	720	840
Working stroke force	kg	3500	7000	10500	14000	17500	21000	24500
Return stroke force	kg	90	180	270	360	450	540	630

Dimensions

SMPT-30T

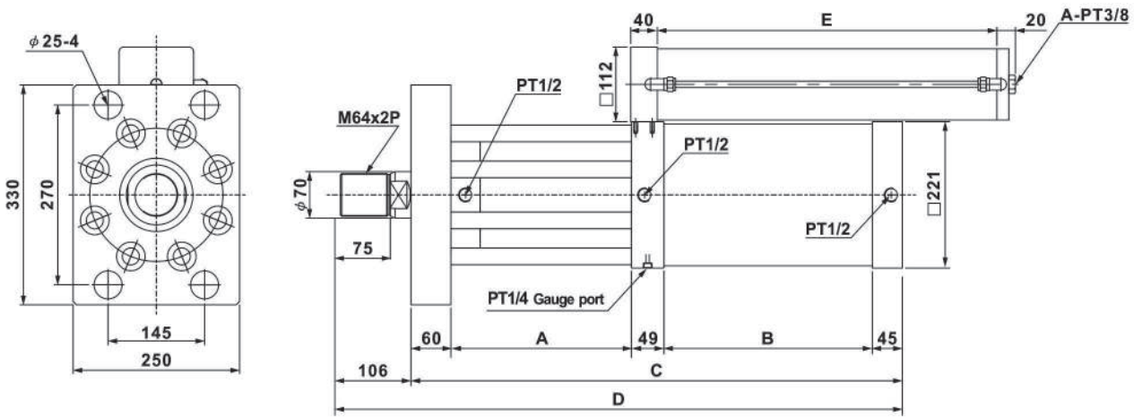

(Unit: mm)

Total stroke	Boosting stroke	A	B	C	D	E
50	5	171	140	465	571	300
100	5	221	140	515	621	400
150	5	271	140	565	671	510
200	5	321	140	615	721	620
50	10	171	226	551	657	300
100	10	221	226	601	707	400
150	10	271	226	651	757	510
200	10	321	226	701	807	620

Total stroke	Boosting stroke	A	B	C	D	E
50	15	171	313	638	744	300
100	15	221	313	688	794	400
150	15	271	313	738	844	510
200	15	321	313	788	894	620
50	20	271	399	824	930	300
100	20	221	399	774	880	400
150	20	271	399	824	930	510
200	20	321	399	874	980	620

Theoretical output

Operating pressure	kg/cm²	1	2	3	4	5	6	7
Approach stroke force	kg	175	350	530	700	880	1000	1200
Working stroke force	kg	5750	11500	17300	23000	28800	34500	40000
Return stroke force	kg	130	260	400	550	690	800	950

Dimensions

SMPT-40T

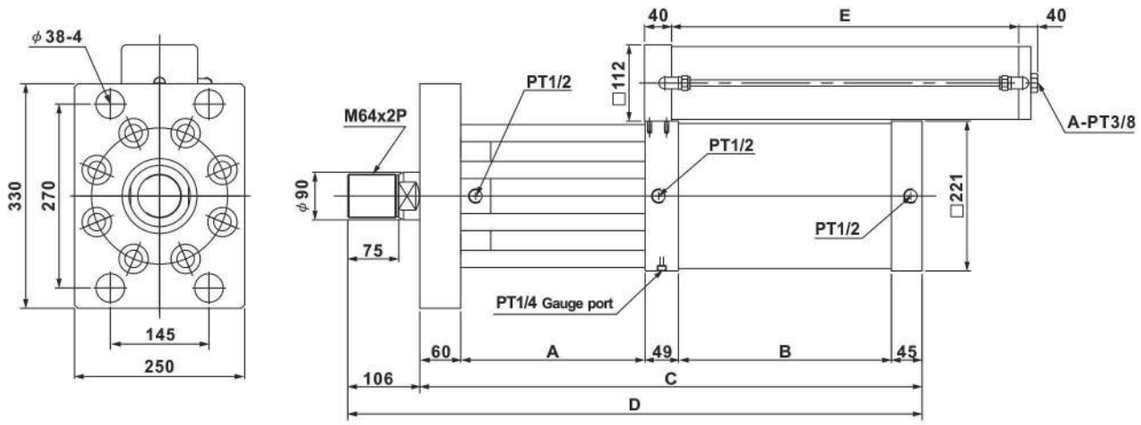

(Unit: mm)

Total stroke	Boosting stroke	A	B	C	D	E
50	5	171	178	503	609	320
100	5	221	178	553	659	400
150	5	271	178	603	709	510
200	5	321	178	653	759	620
50	10	171	303	628	734	320
100	10	221	303	688	784	400
150	10	271	303	728	834	510
200	10	321	303	788	884	620

Total stroke	Boosting stroke	A	B	C	D	E
50	15	271	428	853	859	320
100	15	221	428	803	909	400
150	15	271	428	853	959	510
200	15	321	428	903	1009	620
50	20	426	553	1133	1239	320
100	20	336	553	1043	1149	400
150	20	386	553	1093	1149	510
200	20	321	553	1028	1134	620

Theoretical output

Operating pressure	kg/cm²	1	2	3	4	5	6	7
Approach stroke force	kg	175	350	530	700	880	1000	1200
Working stroke force	kg	7800	15500	23500	31000	39300	47000	55000
Return stroke force	kg	110	220	3.30	450	560	670	780

SMPTC Series Boosting Cylinder

All Stage / Direct Compressive Type

Features

1. Utilize pneumatic system to generate big force for total strokes, there is no need for hydraulic system.
2. Easy to set up, adjust and maintain.
3. Can achiece the sam high pressure.
4. Power source is easy to obtained and more economic.
5. Operation with little noise.
6. Without hight-temp, problem caused by hydraulic cylinder.

How to order

SMPTC –	1T –	5
Boosting cylinder (all stage/direct compressive type)	Total output (T)/Bore size	Total stroke
	1T : Ø50	5 :5mm
	3T : Ø63	10 :10mm
	5T : Ø63	15 :15mm
	8T : Ø80	20 :20mm
	13T : Ø100	

Specifications

Moder	SMPTC
Working motion	Double motion
Working pressure	2 ~ 7 kgf/cm² Dry compress air after filtering
Cycle oil	ISO VG 32
Working Temperature	-5℃ ~ +60℃ (Other working tempertures shall be on requested)
Operation speed	50-700mm/s
Oil cylinder assure pressure	300 kgf/cm²
Air cylinder assure pressure	15 kgf/cm²
Stroke difference	+1.0mm 0
Working frequency	10 times/min

Dimensions

SMPTC-1T

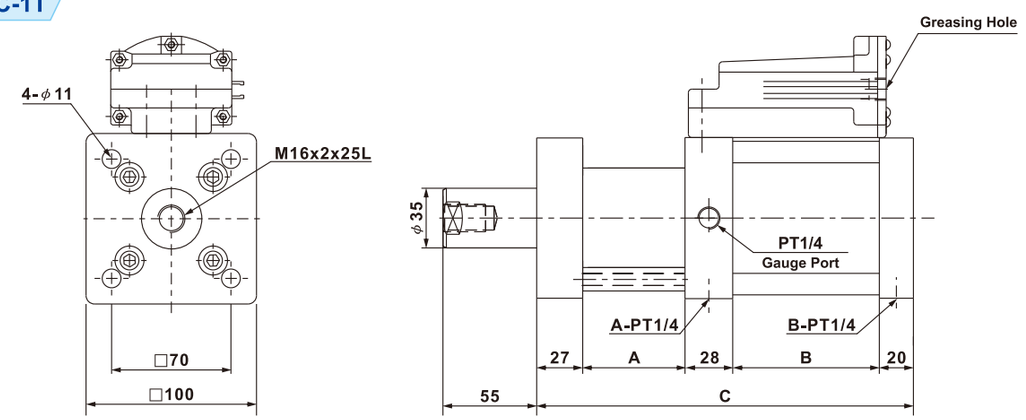

Theoretical output

(Unit: mm)

Operating pressure	Boosting output	Boosting stroke	A	B	C
4 kg/cm²	1000kg	5	65	86	221
5 kg/cm²	1250kg	10	65	111	251
6 kg/cm²	1500kg	15	70	135	280
7 kg/cm²	1750kg	20	75	160	310

SMPTC-3T

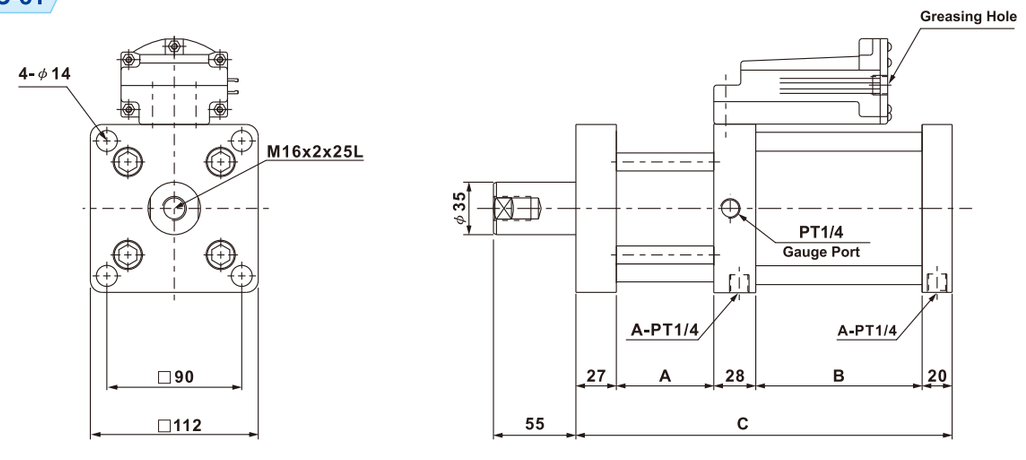

Theoretical output

(Unit: mm)

Operating pressure	Boosting output	Boosting stroke	A	B	C
4 kg/cm²	2400kg	5	65	111	251
5 kg/cm²	3000kg	10	705	151	296
6 kg/cm²	3600kg	15	130	191	396
7 kg/cm²	4200kg	20	135	231	441

Dimensions

SMPTC-5T

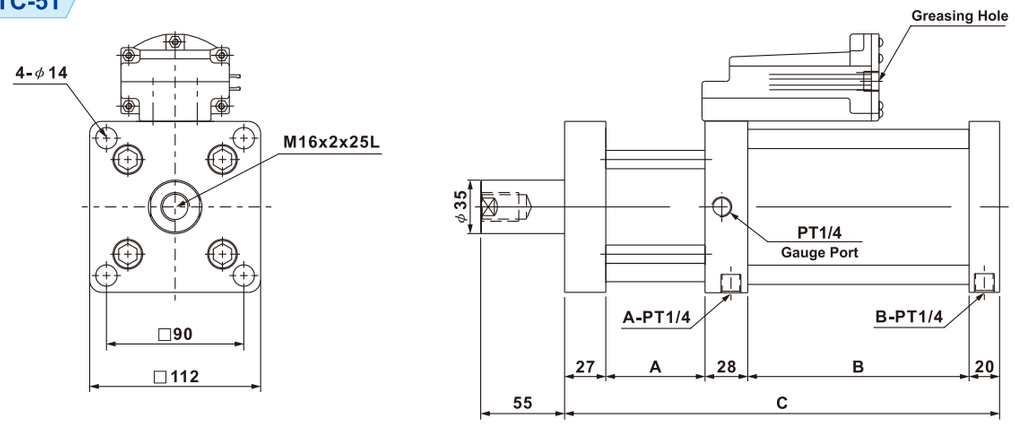

Theoretical output

(Unit: mm)

Operating pressure	Boosting output
4 kg/cm²	3800kg
5 kg/cm²	4800kg
6 kg/cm²	5700kg
7 kg/cm²	6700kg

Boosting stroke	A	B	C
5	65	145	285
10	125	205	405
15	175	265	515
20	220	321	616

SMPTC-8T

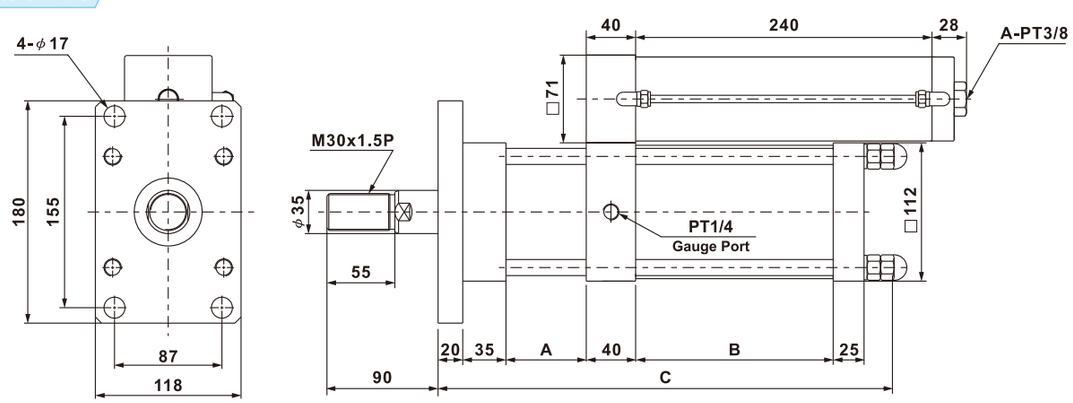

Theoretical output

(Unit: mm)

Operating pressure	Boosting output
4 kg/cm²	5000kg
5 kg/cm²	6200kg
6 kg/cm²	7500kg
7 kg/cm²	8800kg

Boosting stroke	A	B	C
5	65	160	360
10	125	240	485
15	190	320	645
20	280	400	815

Dimensions

SMPTC-13T

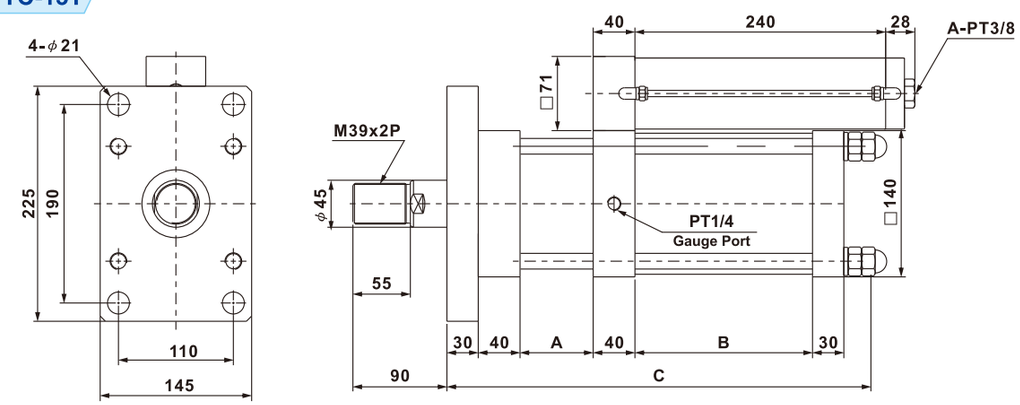

Theoretical output

(Unit: mm)

Operating pressure	Boosting output
4 kg/cm²	7800kg
5 kg/cm²	9800kg
6 kg/cm²	11800kg
7 kg/cm²	13800kg

Boosting stroke	A	B	C
5	70	170	398
10	125	245	528
15	180	320	658
20	250	395	803