Safety Notice & Caution For Booting Systems

1. The power source of boosting system is dry compressed air after filtration (40 micron), the pressure range is about 2-7kgf/cm².
2. For stable air pressure, air tank installed between FRL and boosting system is suggested to reach the best performance of force.
3. Ambient temperature for boosting system is -5~+60℃, please inform your sales representative if your working environment needs special temperature or conditions.
4. For the best air quality, FRL with auto drain is suggested.
5. For the selection of cycle oil, ISO VG32 or ISO VG68 is suggested, and the selection of cycle oil depends on the model of boosting cylinder you purchase. Please follow the specifications on catalogue.
6. It is suggested to install a pressure regulator with check valve on the inlet of working stroke on boosting cylinder to adjust requested output pressure. This is to avoid unnecessary working force causing the waste of energy, the short life for mold and material wearing.
7. The normal installation of boosting cylinder is by flange mounting and the direction is vertical with piston rod downward.
8. The booster installed at higher point than hydraulic cylinder is suggested. If there is a problem for such installation, please contact your sales for other solutions.

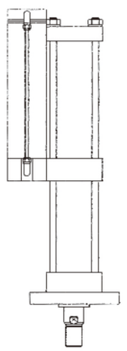

Pic.1

Normally vertical installation with piston rod downward.

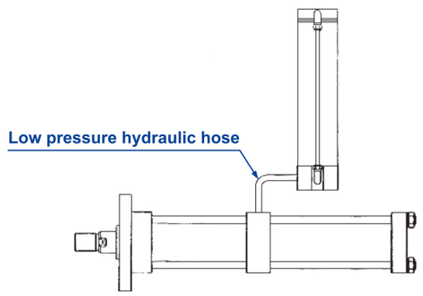

Pic.2

Parallel installation connected to vertical air-hydro converter

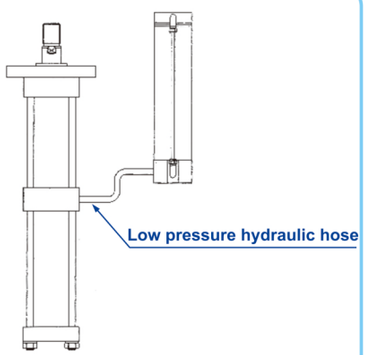

Pic.3

Vertical installation with piston rod upward connected to vertical air-hydro converter.

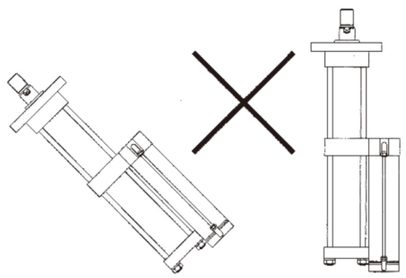

Pic.4

Parallel and leaning installation without vertical air-hydro converter at higher point than boosting cylinder like Pic.3 shown is prohibited.

SMPT Series Boosting Cylinder

Standard Type

Features

1. Utilize pneumatic system to generate big force without hydraulic system.
2. Easy to set up, adjust and maintain.
3. Can achiece the sam high pressure.
4. Power source is easy to obtained and more economic.
5. Operation with little noise.
6. Without hight-temp, problem caused by hydraulic cylinder.

How to order

SMPT –	1T –	50 –	5
Boosting cylinder (standard type)	Total output (T)/Bore size	Total stroke	Working stroke
	1T : Ø63	50 : 50mm	5 : 5mm
	3T : Ø63	100 : 100mm	10 : 10mm
	5T : Ø80	150 : 150mm	15 : 15mm
	8T : Ø80	200 : 200mm	20 : 20mm
	10T : Ø100		
	13T : Ø100		
	15T : Ø125		
	20T : Ø125		
	30T : Ø150		
	40T : Ø150		

Specifications

Moder	SMPT
Working motion	Double motion
Working pressure	2 ~ 7 kgf/cm² Dry compress air after filtering
Cycle oil	ISO VG 68
Working Temperature	-5℃ ~ +60℃ (Other working tempertures shall be on requested)
Operation speed	50-700mm/s
Oil cylinder assure pressure	300 kgf/cm²
Air cylinder assure pressure	15 kgf/cm²
Stroke difference	+1.0mm 0
Working frequency	10 times/min (About 30 times/min. Under 5T)

Dimensions

SMPT-1T

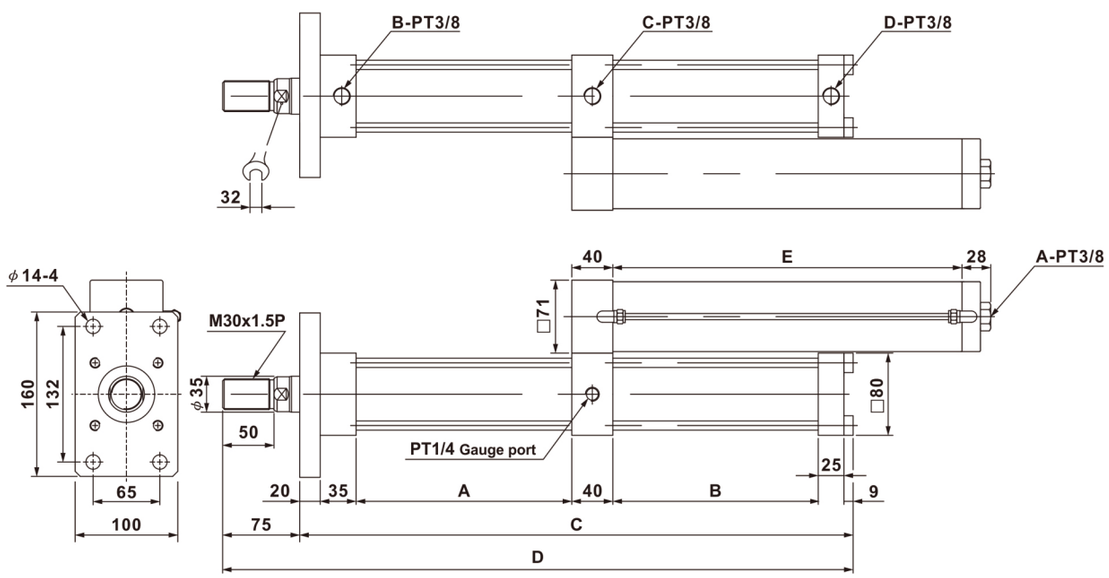

(Unit: mm)

Total stroke	Boosting stroke	A	B	C	D	E
50	5	110	105	345	420	240
100	5	160	105	395	470	300
150	5	210	105	445	520	340
200	5	260	105	495	570	380
50	10	110	155	395	470	240
100	10	160	155	445	520	300
150	10	210	155	495	570	340
200	10	260	155	545	620	380

Total stroke	Boosting stroke	A	B	C	D	E
50	15	110	200	440	515	240
100	15	160	200	490	565	300
150	15	210	200	540	615	340
200	15	260	200	590	665	380
50	20	110	250	490	565	240
100	20	160	250	540	615	300
150	20	210	250	590	665	340
200	20	260	250	640	715	380

Theoretical output

Operating pressure	kg/cm²	1	2	3	4	5	6	7
Approach stroke force	kg	30	60	90	120	150	180	210
Working stroke force	kg	300	600	900	1250	1550	1850	1850
Return stroke force	kg	20	40	60	80	100	120	120

Dimensions

SMPT-3T

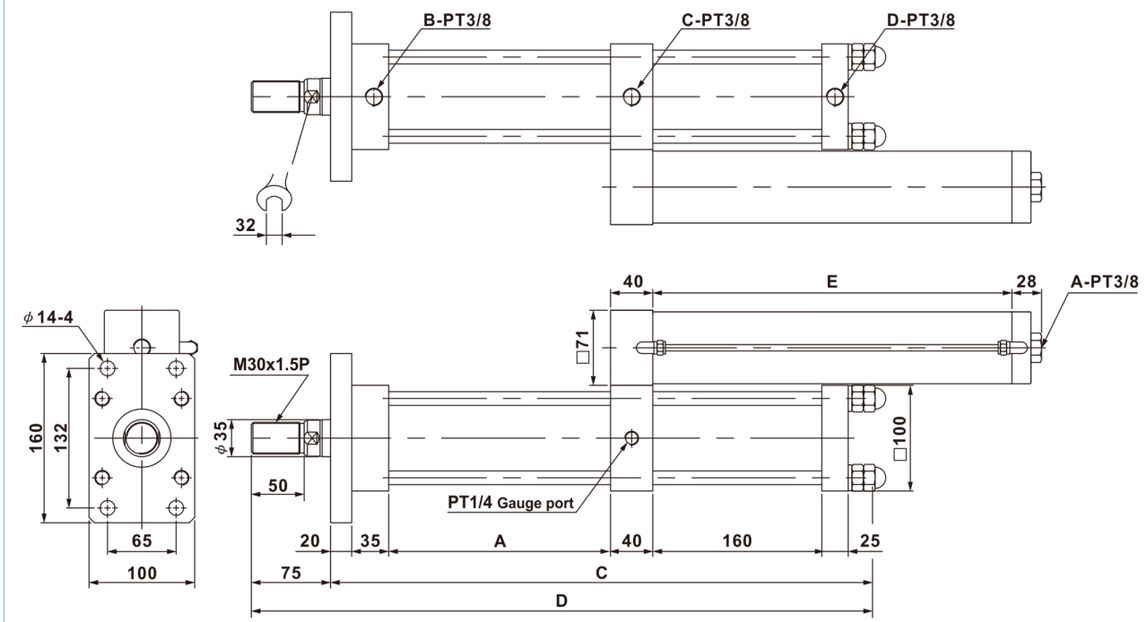

(Unit: mm)

Total stroke	Boosting stroke	A	B	C	D	E
50	5	110	110	355	430	240
100	5	160	110	405	480	300
150	5	210	110	455	530	340
200	5	260	110	505	580	380
50	10	110	160	405	480	240
100	10	160	160	455	530	300
150	10	210	160	505	580	340
200	10	260	160	555	630	380

Total stroke	Boosting stroke	A	B	C	D	E
50	15	110	205	450	525	240
100	15	160	205	500	575	300
150	15	210	205	550	625	340
200	15	260	205	600	675	380
50	20	110	255	500	575	240
100	20	160	255	500	625	300
150	20	210	255	600	675	340
200	20	260	255	650	725	380

Theoretical output

Operating pressure	kg/cm²	1	2	3	4	5	6	7
Approach stroke force	kg	30	60	90	120	150	180	210
Working stroke force	kg	500	1000	1500	2000	2500	3000	3500
Return stroke force	kg	20	40	60	80	100	120	140

Dimensions

SMPT-5T

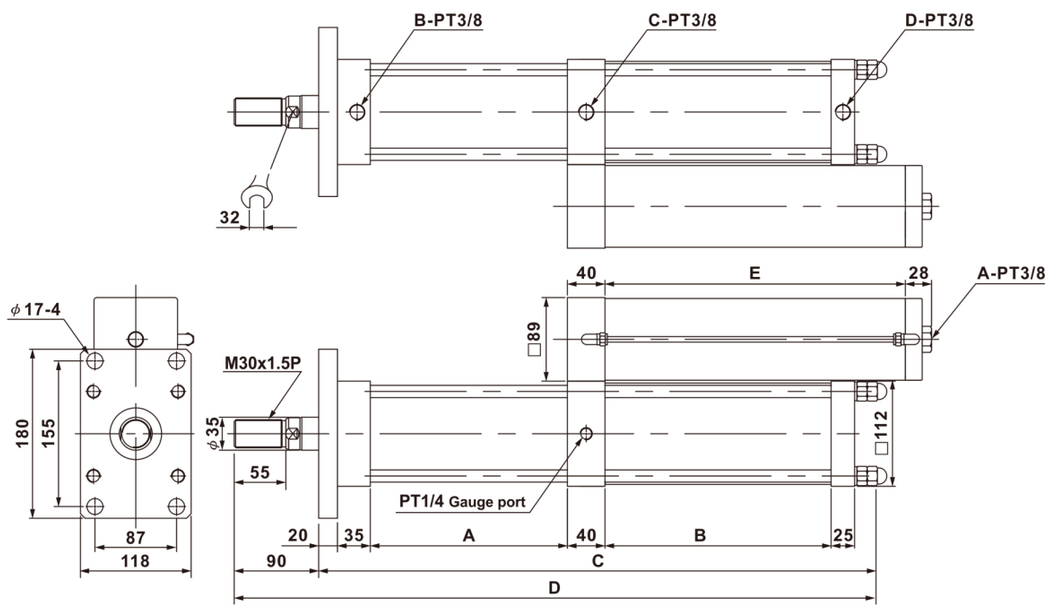

(Unit: mm)

Total stroke	Boosting stroke	A	B	C	D	E	Total stroke	Boosting stroke	A	B	C	D	E
50	5	110	121	366	456	220	50	15	110	241	486	576	220
100	5	160	121	416	506	280	100	15	160	241	536	626	280
150	5	210	121	466	556	320	150	15	210	241	586	676	320
200	5	260	121	516	606	360	200	15	260	241	636	726	360
50	10	110	181	426	516	220	50	20	110	301	596	686	220
100	10	160	181	576	566	280	100	20	160	301	596	686	280
150	10	210	181	526	616	320	150	20	210	301	646	736	320
200	10	260	181	576	666	360	200	20	260	301	696	786	360

Theoretical output

Operating pressure	kg/cm²	1	2	3	4	5	6	7
Approach stroke force	kg	50	100	150	200	250	300	350
Working stroke force	kg	1000	2000	3000	4000	5000	6000	7000
Return stroke force	kg	40	80	120	160	200	240	280

Dimensions

SMPT-8T

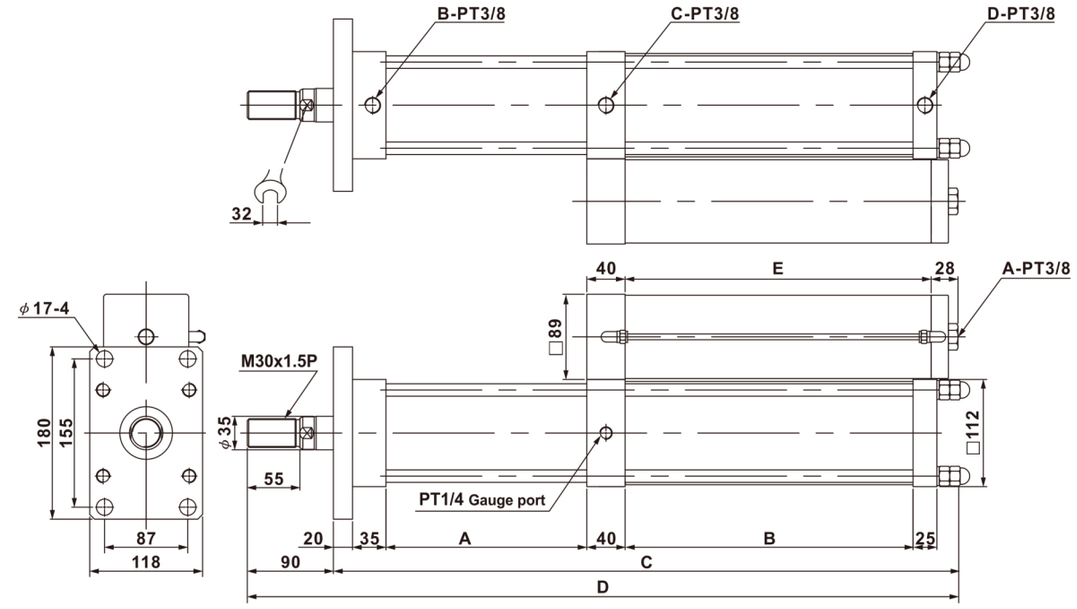

(Unit: mm)

Total stroke	Boosting stroke	A	B	C	D	E	Total stroke	Boosting stroke	A	B	C	D	E
50	5	110	131	376	466	220	50	15	160	301	596	686	220
100	5	160	131	426	576	280	100	15	160	301	596	686	280
150	5	210	131	476	566	320	150	15	210	301	646	736	320
200	5	260	131	526	616	360	200	15	260	301	696	786	360
50	10	110	211	456	546	220	50	20	270	385	790	880	220
100	10	160	211	506	596	280	100	20	260	385	780	870	280
150	10	210	211	556	646	320	150	20	260	385	780	870	320
200	10	260	211	606	696	360	200	20	260	385	780	870	360

Theoretical output

Operating pressure	kg/cm²	1	2	3	4	5	6	7
Approach stroke force	kg	50	100	150	200	250	300	350
Working stroke force	kg	1250	2500	3750	5000	6250	7500	8750
Return stroke force	kg	40	80	120	160	200	240	280

Dimensions

SMPT-10T

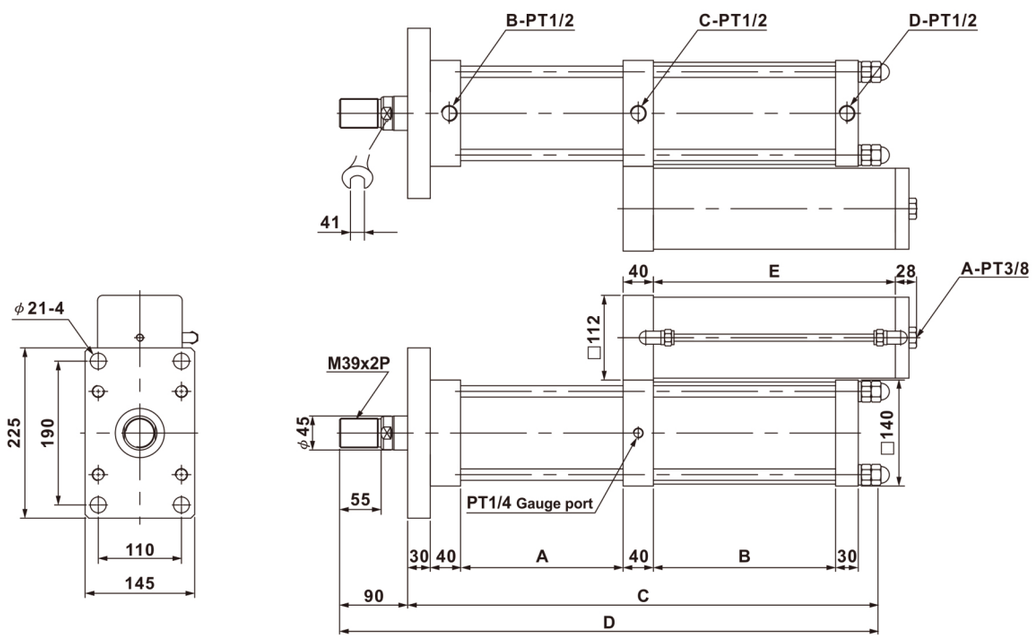

(Unit: mm)

Total stroke	Boosting stroke	A	B	C	D	E
50	5	115	121	402	492	220
100	5	165	121	452	542	280
150	5	215	121	502	592	320
200	5	265	121	552	642	360
50	10	115	181	462	552	220
100	10	165	181	512	602	280
150	10	215	181	562	652	320
200	10	265	181	612	702	360

Total stroke	Boosting stroke	A	B	C	D	E
50	15	115	241	522	612	220
100	15	165	241	572	662	280
150	15	215	241	622	712	320
200	15	265	241	672	762	360
50	20	165	301	582	672	220
100	20	165	301	632	722	280
150	20	215	301	682	772	320
200	20	265	301	732	822	360

Theoretical output

Operating pressure	kg/cm²	1	2	3	4	5	6	7
Approach stroke force	kg	78	156	234	312	390	468	546
Working stroke force	kg	1560	3120	4680	6240	7800	9360	10920
Return stroke force	kg	60	120	180	240	300	360	420

Dimensions

SMPT-13T

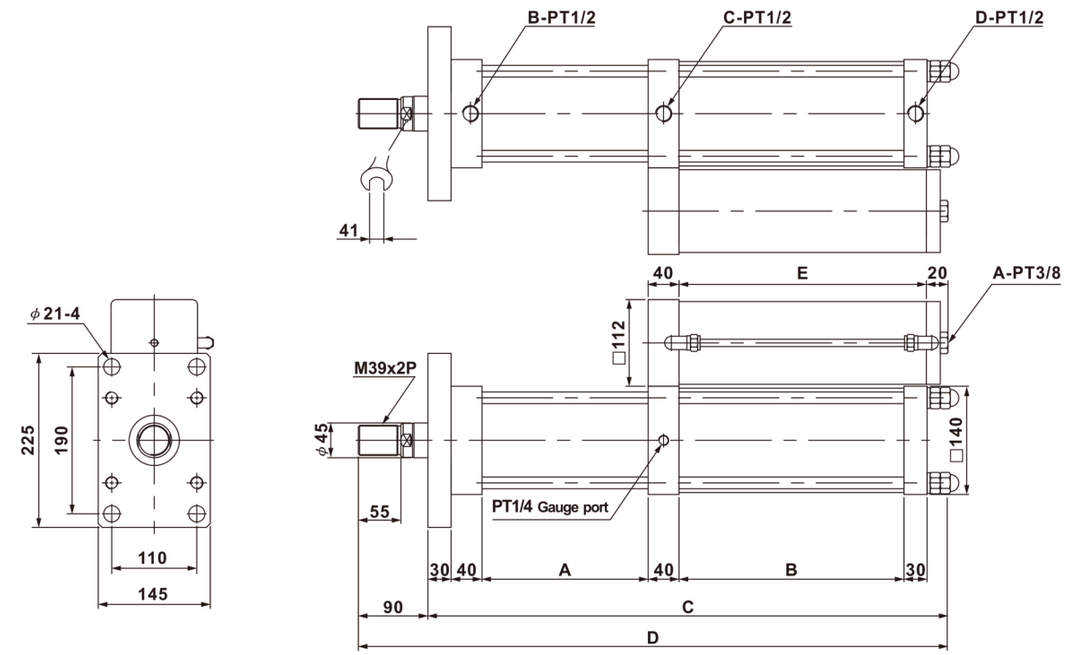

(Unit: mm)

Total stroke	Boosting stroke	A	B	C	D	E
50	5	115	131	412	492	220
100	5	165	131	462	552	280
150	5	215	131	512	602	320
200	5	265	131	562	652	360
50	10	115	211	492	582	220
100	10	165	211	542	632	280
150	10	215	211	592	782	320
200	10	265	211	642	732	360

Total stroke	Boosting stroke	A	B	C	D	E
50	15	115	291	572	662	220
100	15	165	291	622	712	280
150	15	215	291	672	762	320
200	15	265	291	722	812	360
50	20	215	371	752	842	220
100	20	215	371	752	842	280
150	20	215	371	752	842	320
200	20	265	371	802	492	360

Theoretical output

Operating pressure	kg/cm²	1	2	3	4	5	6	7
Approach stroke force	kg	78	156	234	312	390	468	546
Working stroke force	kg	1970	3940	5910	7880	9850	11820	13790
Return stroke force	kg	60	120	180	240	300	360	420

Dimensions

SMPT-15T

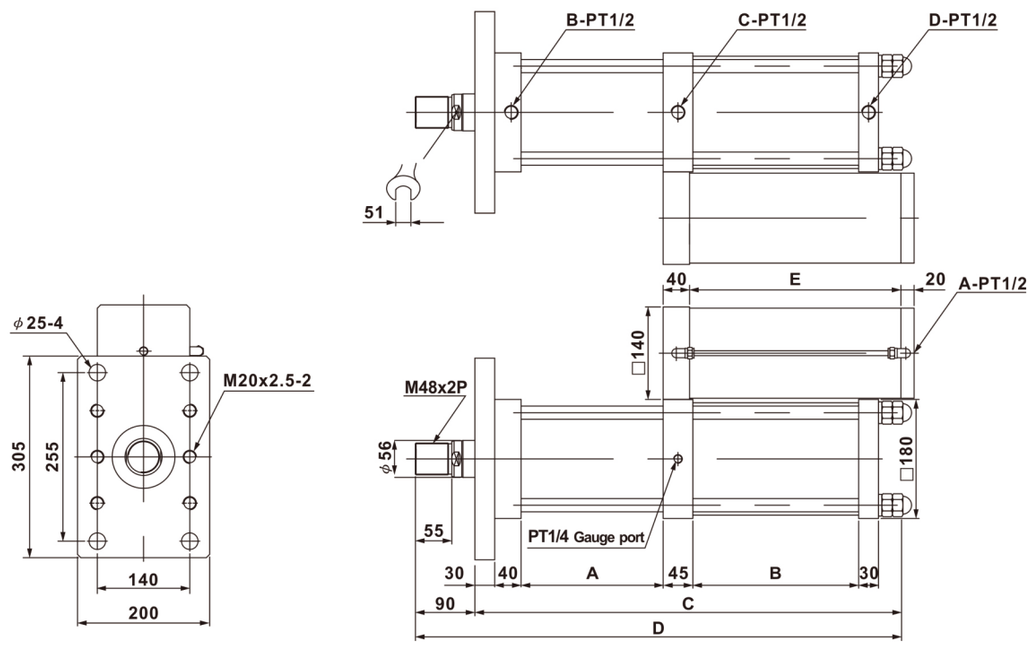

(Unit: mm)

Total stroke	Boosting stroke	A	B	C	D	E
50	5	115	131	426	516	220
100	5	165	131	476	566	280
150	5	215	131	526	602	320
200	5	265	131	576	652	360
50	10	115	191	486	582	220
100	10	165	191	536	632	280
150	10	215	191	586	782	320
200	10	265	191	636	732	360

Total stroke	Boosting stroke	A	B	C	D	E
50	15	115	251	546	636	220
100	15	165	251	596	686	280
150	15	215	251	646	736	320
200	15	265	251	696	786	360
50	20	165	311	656	746	220
100	20	165	311	656	746	280
150	20	215	311	706	796	320
200	20	265	311	756	846	360

Theoretical output

Operating pressure	kg/cm²	1	2	3	4	5	6	7
Approach stroke force	kg	120	240	360	480	600	720	840
Working stroke force	kg	2560	5120	7680	10240	12800	15350	17900
Return stroke force	kg	90	180	270	360	450	540	630

Dimensions

SMPT-20T

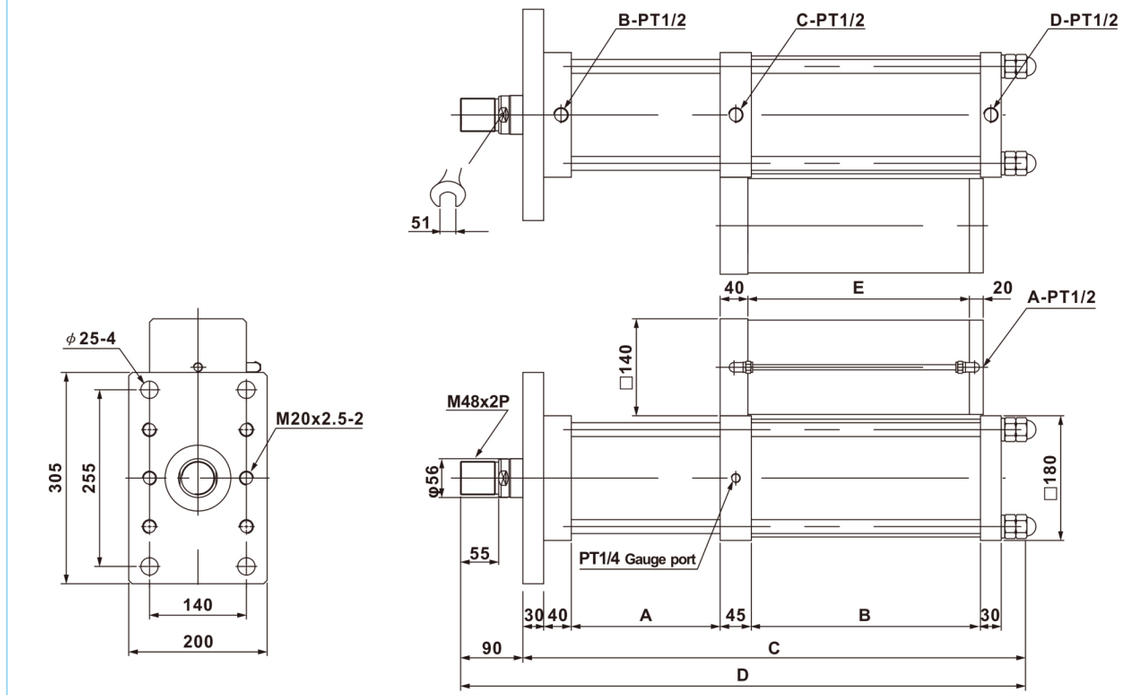

(Unit: mm)

Total stroke	Boosting stroke	A	B	C	D	E
50	5	115	151	446	536	220
100	5	165	151	496	586	280
150	5	215	151	546	636	320
200	5	265	151	596	686	360
50	10	115	241	536	626	220
100	10	165	241	586	676	280
150	10	215	241	636	726	320
200	10	265	241	686	776	360

Total stroke	Boosting stroke	A	B	C	D	E
50	15	165	331	676	766	220
100	15	165	331	676	766	280
150	15	215	331	726	816	320
200	15	265	331	776	866	360
50	20	265	411	856	946	220
100	20	265	411	856	946	280
150	20	215	411	806	896	320
200	20	265	411	856	946	360

Theoretical output

Operating pressure	kg/cm²	1	2	3	4	5	6	7
Approach stroke force	kg	120	240	360	480	600	720	840
Working stroke force	kg	3500	7000	10500	14000	17500	21000	24500
Return stroke force	kg	90	180	270	360	450	540	630

Dimensions

SMPT-30T

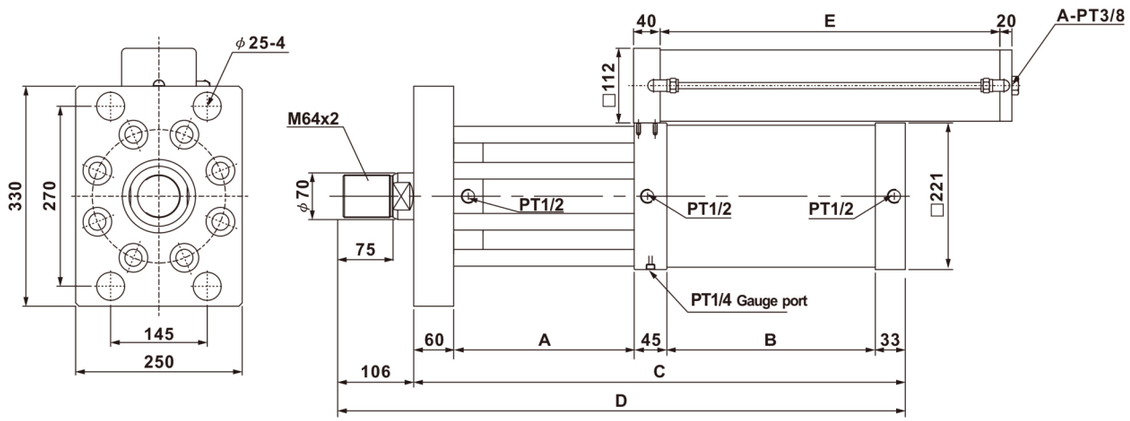

(Unit: mm)

Total stroke	Boosting stroke	A	B	C	D	E
50	5	171	140	465	571	300
100	5	221	140	515	621	400
150	5	271	140	565	671	510
200	5	321	140	615	721	620
50	10	171	226	551	657	300
100	10	221	226	601	707	400
150	10	271	226	651	757	510
200	10	321	226	701	807	620

Total stroke	Boosting stroke	A	B	C	D	E
50	15	171	313	638	744	300
100	15	221	313	688	794	400
150	15	271	313	738	844	510
200	15	321	313	788	894	620
50	20	271	399	824	930	300
100	20	221	399	774	880	400
150	20	271	399	824	930	510
200	20	321	399	874	980	620

Theoretical Output

Opearing Pressure	kg/cm²	1	2	3	4	5	6	7
Approach Stroke Force	kg	175	350	530	700	880	1000	1200
Working Stroke Force	kg	5750	11500	17300	23000	28800	34500	40000
Return Stroke Force	kg	130	260	400	550	690	800	950

Dimensions

SMPT-40T

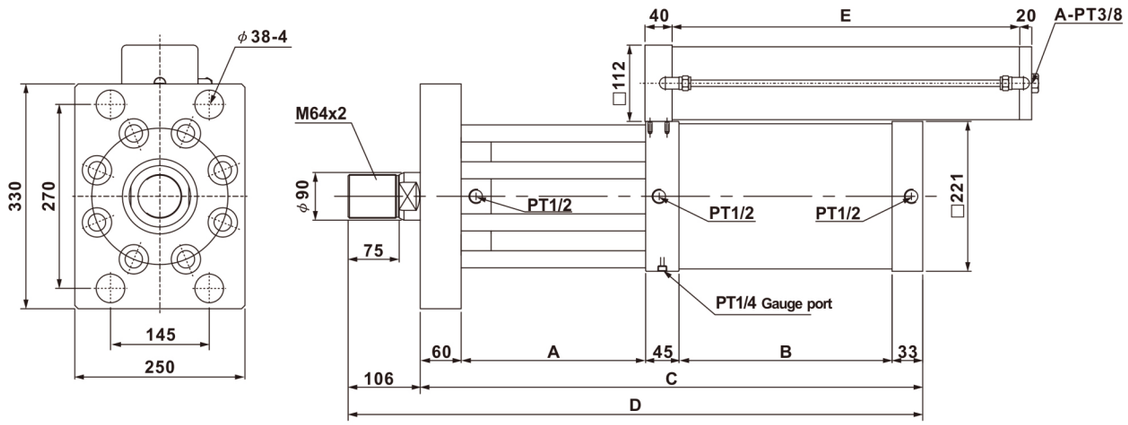

(Unit: mm)

Total stroke	Boosting stroke	A	B	C	D	E
50	5	171	214	523	629	320
100	5	221	214	573	679	430
150	5	271	214	623	729	580
200	5	321	214	673	779	680
50	10	171	339	648	754	320
100	10	221	339	698	804	430
150	10	271	339	748	854	580
200	10	321	339	798	904	680

Total stroke	Boosting stroke	A	B	C	D	E
50	15	271	464	873	979	320
100	15	221	464	823	929	430
150	15	271	464	873	979	580
200	15	321	464	923	1029	680
50	20	421	589	1148	1254	320
100	20	371	589	1089	1195	430
150	20	421	589	1148	1254	580
200	20	321	589	1048	1154	680

Theoretical Output

Opearing Pressure	kg/cm²	1	2	3	4	5	6	7
Approach Stroke Force	kg	175	350	530	700	880	1000	1200
Working Stroke Force	kg	7800	15500	23500	31000	39300	47000	55000
Return Stroke Force	kg	110	220	330	450	560	670	780