Filter Regulator

Symbol

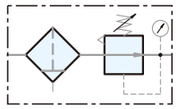

Features

1. Remove water and particle effectively.
2. 40μm and 5μm filter element are easily interchangeable and replaceable.
3. Accurate and easy pressure setting.

How to order

UCFR –	02	N	C	G	H	A
Filter Regulator	Port size	Thread	Filtration	Gauge type	Drain	Bowl
	02 :1/4" **03** :3/8" **04** :1/2"	**Blank** :G **N** :NPT **R** :Rc	PE **Blank** :5μm **C**:40μm Sintered brass **S**:5μm **T** :40μm	**Blank** :Square **G** :Circle	**Blank**:Semi-auto drain **H**:Manual drain **D**:Auto drain	**Blank** :Standard bowl **A** :Anti-acid & alkali bowl **AL**:Aluminum bowl

Please contact our sales for non-relieving type.
*For non-relieving type, the secondary pressure is not allowed to be exhausted when it is higher than setting pressure.

Specifications

Model	UCFR-02	UCFR-03	UCFR-04
Port size	1/4"	3/8"	1/2"
Fluid	Compressed air		
Regulator construction	Piston		
Body material	Aluminum die-cast		
Bowl material	Polycarbonate (Standard), Anti-acid & alkali bowl (Option), Aluminum bowl (Option)		
Filtration	PE: 5μm (Standard),40μm (Option); Sintered brass(Option):5μm,40μm		
Operating pressure range	0.5 ~ 10 kgf/cm²		
Max. inlet pressure	15 kgf/cm²		
Max. flow rate l/min (ANR) 40μm	2080	2100	2600
Ambient temperature	-10°C ~ 60°C		
Filter bowl capacity	105cc		
Standard drain	Semi-auto drain (Drains below 0.5kgf/cm²)		
Net weight	810g (Al bowl 1110g)		
Accessories	Mounting bracket set, Plug		
Option	Mounting nut		

Dimensions

UCFR-02, 03, 04

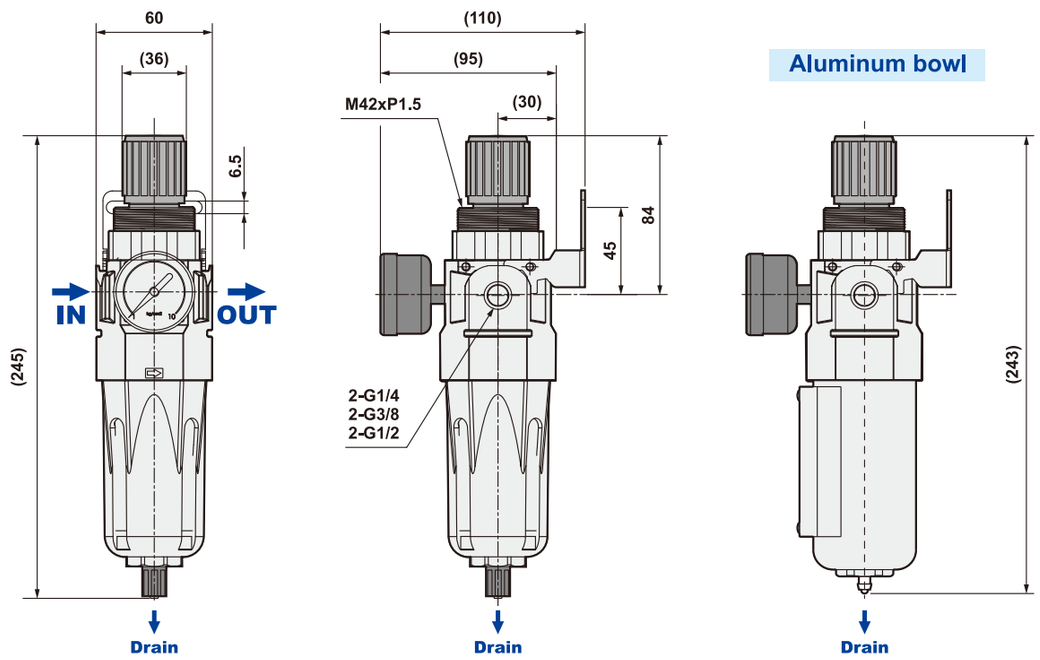

Flow chart

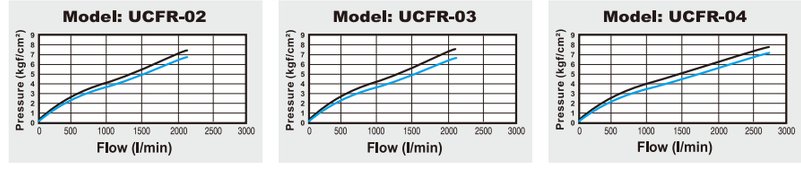

Note:
X axis: Flow (l/min)
Y axis: Pressure (kgf/cm²)
Blue line (P0)= Outlet pressure
Black line (P1)= Inlet pressure
P1-P0= Pressure range